PIGGING PRODUCTS & SERVICES ASSOCIATION

An international trade association serving the pipeline industry

BUYERS' GUIDE & DIRECTORY OF MEMBERS

2012 – 2013

24th Edition

www.ppsa-online.com

Pigging Products and Services Association
PO Box 30, Kesgrave, Ipswich, Suffolk, IP5 2WY, UK
Tel: +44 1473 635863 Fax: +44 1473 353597
Email: ppsa@ppsa-online.com

PIGGING PRODUCTS & SERVICES ASSOCIATION

DIRECTORS AND OFFICERS 2012

President	Basil Hostage, 3 P Services GmbH & Co KG, Germany
Vice President	Terry DeLasalle, Greene's Energy Group, USA
Director/Past President	Alan Sweeney, Enermech Mechanical Services Inc, USA
Director	Paul Birkinshaw, Penspen Integrity, UK
Director	Mark Elliott, Baker Hughes Process and Pipeline Services, USA
Director	Steve Mayo, Pipelines 2 Data, (P2D) Ltd, UK
Non-executive Director	Ben Cottam, Cottam Brush Ltd, UK
Treasurer	Aidan O'Donoghue, Pipeline Research Ltd, UK
Executive Secretary	Diane Cordell, Audium Solutions Ltd, UK
Technical Advisers	John Pitchford, Pitchford In-Line, UK
	Aidan O'Donoghue, Pipeline Research Ltd, UK
	David E Bull, ViaData LP, USA
	Jack Smart, John Smart Consulting Engineers, USA
	Patrick C Porter, P C Porter Consulting, USA
	Tom Sowerby, Tom Sowerby Ltd, UK
	Doug and Christine Woodley, Woodley Pipeline Services Ltd, UK

The Pigging Products and Services Association (PPSA) was founded in 1990 by Jim Cordell and now has over 100 members, from 20 countries representing the pigging industry throughout the world.

The Association is entirely funded by its members through their annual subscription fees. Its aims are, "To promote the knowledge of pigging and its related products and services by providing a channel of communication between the members themselves, and with users and other interested parties".

PPSA plays a major role in providing information and sourcing equipment and services, for pipeline operators and the industry generally and responds to hundreds of enquiries each year.

The PPSA web site enables visitors to source the products and services they need quickly and easily and provides a link to PPSA's technical information service.

PPSA runs seminars and training courses on pigging, sponsors lectures and meetings about the subject and supports relevant conferences.

Full Members are companies manufacturing or marketing pigging products and services.

Associate Members are companies connected with the industry, e.g. operators, suppliers and allied industries.

Individual Members are anyone with an interest in pigging.

For further information, technical enquiries, or to find out how to join the Association please contact:

Diane Cordell, Executive Secretary
Pigging Products and Services Association
PO Box 30, Kesgrave, Ipswich, Suffolk
IP5 2WY, UK

E-mail: ppsa@ppsa-online.com
www.ppsa-online.com
Tel: +44 1473 635863
Fax: +44 1473 353597

The following has been extracted from the PPSA book: "An Introduction to Pipeline Pigging". It (and other books about pigging) is available from ***Scientific Surveys Ltd****, PO Box 21, Beaconsfield, Bucks, HP9 1NS, UK.*
E-mail: *jt@scientificsurveys.com ISBN 0 901360 26 0, 104 pages, price: £21.00 UK, $52 US elsewhere, including P&P.*

WHY PIG A PIPELINE?

It is generally agreed that a pipeline should be pigged, but the reasons for doing so are not always fully appreciated. This may result in improper pigging programs and/or the use of the wrong type of pig and this could have an adverse effect on the pipeline's operating and maintenance costs.

A pipeline is arguably the most efficient method yet devised for transporting fluids – whether gases or liquids. Its relative efficiency though, depends upon two fundamental requirements:

1. It must operate continuously.
2. The required throughput must be obtained with the least capital investment and the lowest operating costs.

Utility pigs and In Line Inspection tools ('intelligent/smart pigs') play a major role in both obtaining and maintaining these 'two fundamentals':

1. They help to ensure continuous operation by:
   – removing any substance which might damage the pipeline process systems
   – helping to prevent the formation of corrosion cells
   – providing timely information of any developing problems
   – providing data on any perceived problems to enable informed decisions to be made
   – providing an alternative to shutting down for statutory periodic testing.
2. They help to ensure maximum efficiency by:
   – removing any debris or foreign matter in the line
   – removing any deposits, either liquid or solid, which might otherwise build up and restrict the flow
   – by monitoring the operating and/or physical conditions of the line.

In short, pipeline pigs help to ensure that the pipeline is constructed properly – and that it stays that way.

Pigging is required during each phase in the life of a pipeline, typically:

During construction
i) Removing debris from the line
ii) Pressure testing
iii) Commissioning

During operation
i) Pipe wall cleaning
ii) Condensate removal
iii) Product separation
iv) Applying inhibitors

For inspection
i) To check for damage
ii) To detect corrosion or cracking
iii) Leak detection
iv) Sampling
v) Line cover and spanning

For general maintenance and repair
i) Corrosion inhibition
ii) Pre-inspection cleaning
iii) Decommissioning
iv) Isolation
v) Recommissioning

During renovation/rehabilitation
i) Gel pigging
ii) Applying in situ coatings
iii) Chemical cleaning
iv) Scale removal
v) Product conversion

Decommissioning
i) Product removal
ii) Inerting

Many pipeliners only resort to pigging when a problem becomes apparent and they have no other choice. Often, this is too late. The damage has been done and a multi-million dollar investment is put at risk. Use of the correct type of pig and a proper pigging program will help to maintain the integrity and optimum efficiency of the pipeline; safeguarding both the environment and the assets of the pipeline owner. The PPSA book: "An Introduction to Pipeline Pigging" will provide guidance in this respect, but if in any doubt, contact should be made with a PPSA member company, who will be pleased to advise.

PIG TRAP DESIGN GUIDANCE NOTES

The main purpose of a pipeline pig trap system is to provide, in a safe manner - and without flow interruption - the means to both insert and launch a pig into a pipeline and receive and retrieve a pig from a pipeline.

The essential difference between a launching and receiving trap is:

- **Overall length** - the receiver is longer
- **Position of bypass** - closer to the reducer on receivers
- **Location of pig signallers** - sited on the neck pipe of receivers

In pipelines where spheres are to be used, the traps have a small incline for launchers and a decline for receivers.

Minimum requirements with regard to design parameters, components and configurations are as shown in the table below:

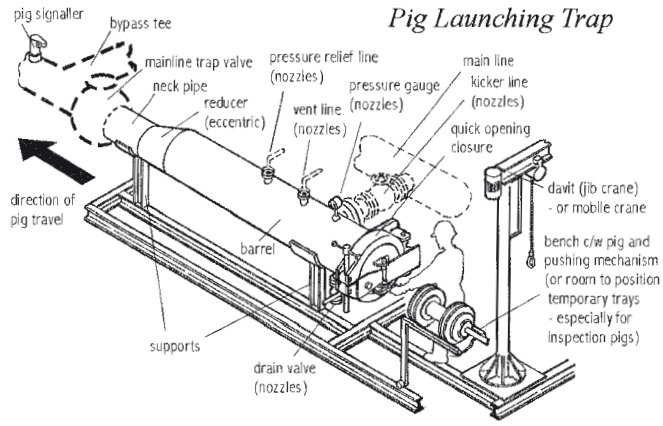

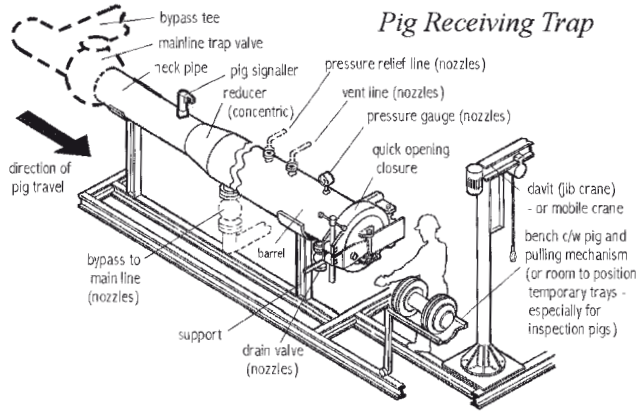

		CONVENTIONAL PIGS		INSPECTION PIGS	
		LAUNCHER	RECEIVER	LAUNCHER	RECEIVER
BARREL	Diameter	2"> Neck pipe dia.		4"> Neck pipe dia.	
	Length	Neck pipe dia. x 4	Neck pipe dia. x 6	Tool length + 10%	Tool length + 10%
NECK	Length	≤24"ns: 500mm >24"ns: 1000mm		Tool length + 10%	Tool length + 10%
NOZZLES Pipeline dia/nozzle dia Note: All diameters are nominal size (ns)	Bypass	Neck pipe dia. x 25%		As Conventional Pigs	
	Vent	≤12"/1"; >12"/ ≥2"			
	Drain	≤12"/2"; >12"/ ≥4"			

DESIGN PARAMETERS to be considered:
Design code; Working pressure; Temperature; Testing & Inspection requirements; Welding requirements; Line product; Materials of manufacture; Type of pigs to be used; Paint finish

Important note! The above information is not intended to be a recommendation, but simply a guide to pig trap design. It will be applicable in some cases, but in many others, the design will have to be tailored to meet specific requirements. It is therefore essential that discussions are held with a PPSA member company before finalising any design.

Alphabetic List of Members / Index

FULL MEMBERS 6–35
A.Hak Industrial Services B.V. 6
Alchemy Oilfield Services Ltd. 6
Apache Pipeline Products 6
Applus RTD. 6
Aubin Limited 7
BG Technical Ltd 7
Baker Hughes Process and Pipeline Services 8
CDRiA Pipeline Services Ltd 8
Challenger Special Oil Services/Entrepose Contracting 9
China Petroleum Pipeline Inspection Technologies Co Ltd 9
Control Devices, Inc 9
Diascan Technical Diagnostics Center Ojsc 9
Enermech Ltd 10
FTL Technology Ltd 10
GD Engineering 10
Girard Industries 11
Greene's Energy Group 11
Gulf Petrochemical Services & Trading LLC 12
Halliburton 12
Hunter McDonnell Pipeline Services 13
IK Stavanger 13
IKM Testing AS 13
Inline Services Inc 14
Inpipe Products Ltd 14
Kleiss & Co bv 15
Knapp Polly Pig Inc 15
LTS, Inc 15
Lin Scan Advanced Pipeline & Tank Services 16
MACAW Engineering Ltd 16
NDT Systems & Services AG 17
N-SPEC® 17
Narmada Offshore Constructions Pvt Ltd. 18
Netherlocks Safety Systems BV 18
Oceaneering Pipetech AS 18
Online Electronics Ltd / Online Valves Ltd 19
3P Services GmbH & Co KG 19
PII Pipeline Solutions 20
PNS – Pipeline Nitrogen Services bv. 20
Key to Chart of Members' Services 21
Chart of Members' Services 22–23
PSI Pipeline Services International GmbH & Co KG 24
Penspen Integrity 24
Pigs Unlimited International, Inc 24
Pigtek Limited 25
Pipeline Engineering 25
Pipeline Pigging Products Inc. 26
Pipeline Services LLC (PLS). 26
Pipelines 2 Data (P2D) Ltd 26
Pipesurvey International CV. 26
Pipetech Corporation Ltd. 27
Pipeway International, Inc. 27
PolyEurope International Ltd 27
Quest Integrity Group, LLC 28
RAS Rohrleitungs- und Analgen Service GmbH & Co. KG . . . 28
Robbins & Myers Energy Services 28
Romstar Sdn Bhd. 29
ROPLAST 29
ROSEN Group 30
STATS Group 31
Serck Services (Gulf) Ltd. 31
Spetsneftegaz NPO JSC 31
T D Williamson 32
TRAPIL. 32
Technipipe 33
Tianjin Greentsing Pipeline Scin & Tech Dev Co Ltd 33
Topline Limited 33
Tracerco 34
Trans Asia Pipeline Services FZC 34
Trident Underwater Engineering (Systems) Ltd. 34
VP Engineers. 35
Vee Kay Vikram & Co 35
Weatherford Pipeline & Specialty Services. 35

ASSOCIATE MEMBERS 36–40
***Index of Services*. 36**
Atlas Copco Rental B.V. 36
Brenntag Nederland BV 36
China Petroleum Pipeline No. 4 Engineering Corp 37
The Clock Spring Company, L.P. 37
Cottam Brush Ltd. 37
Dow Formulated Systems 37
Fiberbuilt® Manufacturing Inc. 38
Ghizzoni SpA. 38
Innospection Limited 38
Integrated Magnetics Inc. 38
Jee Ltd 39
Osborn International GmbH. 39
P.S.E. International Ltd 39
Saft America, Inc 39
Shell UK Exploration & Production 39
Speedy International Asset Services Equipment Rental LLC. . 40
Statoil ASA 40
S.N.T.G.N. Transgaz S.A. 40

INDIVIDUAL MEMBERS 40–42
Che Mokhtar Bin Shaari 40
David E Bull 40
Claudio Dias 40
Ken Gibson 40
Virginio Grassi 40
Steve Hutcheson 41
Philip Johnson. 41
Oliver Klinger. 41
BJ Lowe 41
Steve Ma 41
Aidan O'Donoghue 41
John Pitchford 41
Patrick C Porter 41
Dr J Smart 41
Tom Sowerby. 41
Torbjorn Staalesen 42
Björn Stoltze 42
Jusuf Sutomo 42
John Tiratsoo. 42
Doug & Chris Woodley 42

HONORARY MEMBERS 42
Gill Hornby 42
Chris Kershaw 42
Coleman McDonough 42

Disclaimer

The information contained in this publication has been submitted by the Members and is intended for guidance only. The Pigging Products & Services Association cannot accept responsibility for its accuracy, nor for any errors or omissions which may have occurred.

A.Hak Industrial Services B.V.

Steenoven 2–6, 4196 HG Tricht, PO Box 151,
4190 CD Geldermalsen, The Netherlands
Tel: +31 345 579 211 **Fax:** +31 345 579 379
E-mail: sales@a-hak-is.com **www.**a-hak-is.com
Contact: J H Robbe, Managing Director
Contact (PPSA): L J Gruitroij, Business Director
Contact (Sales): H L Schepers, Business Director

A.Hak Industrial Services provides industrial, pipeline, inspection and tank services to (petro)chemical, refining and pipeline industries. A.Hak's global presence serves the industry world-wide, having sales and operational bases in northern and southern Europe, Brasil, USA, UAE, South Africa and 25 agents.

Inspection Services – in-line inspection of non-piggable pipelines from assessments, pre-engineering, mechanical works/cleaning to gauging/caliper running, inspecting, reporting and consulting.

Pipeline Services – engineering and construction services, pre-, re-, and commissioning services, maintenance & operating services and decommissioning services.

Industrial Services – range of nitrogen services, including reactor cooling, leak detection, system purging, furnace cleaning and chemical cleaning.

Tank Services – sludge management, bottom inspection, storage tank cleaning and foam inerting.

Alchemy Oilfield Services Ltd

Unit 19D Camiestone Road, Thainstone Business Park,
Inverurie, Aberdeenshire, AB51 5GT
Tel: +44 1467 672100
E-mail: alison.taylor@alchemy-oil.com
www.alchemy-oil.com
Contact (PPSA & Sales): Alison Taylor

Alchemy primarily specialise in gels and sealing materials for offshore and onshore oil industry applications. They provide a range of gels and gel pigs for cleaning, debris removal, dewatering, de-oiling, chemical treatment separation and spool filling for sea-water ingress prevention. Uniquely Alchemy has perfected the manufacture of gels from Kits® and biodegradable gel pigs with low and high temperature stability. All products are environmentally friendly and are approved by CEFAS for use in the North Sea.

Alchemy manufacture and supply high specification sealing products for wellheads, valve and pipeline applications and provide a solution based response to pipeline emergencies for remediation of difficult and sometimes safety critical applications.

Apache Pipeline Products

2115-91 Avenue, Edmonton, Alberta, Canada,
T6E 1L1
Tel: +1 780 416 4850 **Fax:** +1 780 416 4829
E-mail: dmcnabb@apachepipe.com
www.apachepipe.com
Contact (PPSA): Stu Chase
Contact (Sales): Don McNabb

Apache's commitment to quality, service and continual product development provides the industry with "leading edge" technology. Apache Pipeline Products is a major manufacturer of pipeline cleaning and maintenance equipment. The company manufactures a complete range of pipeline cleaners, including foam pigs, mandrel pigs, solid cast urethane pigs and modular all-urethane pigs. Apache also manufactures replacement elements such as discs, scraper cups, conical cups and other auxiliary pipeline accessories.

The patented pig passage indicator, the Apache "pigPRO" is also made at the Edmonton, Canada facility and has been designed to install easily on other manufacturers' existing mounts. The units are available with a variety of signals including visual flag/manual reset, electrical/auto reset, or a visual/electrical combination.

Applus RTD

Delftweg 144, 3046 NC Rotterdam, The Netherlands
Tel: +31 10 716 6000 **Fax:** +31 10 716 6198
www.applusrtd.com
Contact (PPSA): Jan Pols
jan.pols@applusrtd.com
Contact (Sales): Frans Snoep
frans.snoep@applusrtd.com

Applus RTD is a world-wide operating provider of Asset Integrity Services with presence in over 35 countries and has over 4000 employees.

The pipeline division is specialized in internal ultrasonic inspections of "unpiggable" pipelines, municipal heating grids, offshore platform risers, SCRs, casings, etc.

Their inspection tools are self propelled, cable operated ultrasonic crawlers measuring internal and external

corrosion, remaining wall thickness, geometrical deviations etcetera. Optionally tools can provide 3D routing data.

The Inspection range is for 4" to 60" and lengths up to 17km, providing full circumferential coverage with fixed/rotating transducer head configurations.

Tailor-made pipeline inspection solutions adapted to local circumstances can be developed by in-house R&D.

Additionally technical services on pipeline integrity, reliability and safety can be provided.

Aubin Limited

Unit 1 Castle Street, Castlepark Industrial Estate, Ellon, AB41 9RF, UK
Tel: +44 1358 724361 **Fax:** +44 1358 723996
E-mail: Ray@aubin.co.uk
www.aubin.co.uk
Contact (PPSA & Sales): Raymond Stirton
Contact (Sales): Martin Ridge

Aubin are market leaders in the development and supply of novel pipeline gel technologies for use in oil, water and gas pipelines. They offer a full range of gels and chemical pigs for cleaning, de-oiling/dewatering, debris removal, chemical train separation and spool filling. With the environment one of Aubin's top priorities, they make their products as 'green' as possible and so most of their gels are approved by CEFAS for use in the North Sea as CHARM category Gold.

Aubin also offer specialist gels for applications such as buoyancy (DeepBuoy), leak sealing (DeepSeal) and insulation (DeepGel). Also, they have developed the world's first chemical pig capable of negotiating multi-bore pipelines (L-Gel Pig).

BG Technical Ltd

149 Trans Amadi Ind. Lay Out (Opposite Michelin), Port Harcourt, Nigeria
Tel: +234 84-571215 **Fax:** +234 84-238647
E-mail: ph@bgtechnical.com
Contact (Sales): Stewart Logan
Stewart.l@bgtechnical.com

BG Technical Ltd
No 8, 29th Street, DDPA (Bendel Estate), Ugborikoko Effurun, PO Box 1920, Warri, Nigeria

BG Technical Inc
12808 West Airport Blvd, #250, Sugar Land, Texas 77478, USA
Mail: BGT Inc, PO Box 1867, Sugar Land, Texas 77487, USA
Tel: +1 281 240 1030 **Fax:** +1 281 240 1044

BG Technical Limited (BGT) is a leading pipeline service company with significant activity in Africa. Areas of specialisation are pigging services; project design and execution, inline inspection service; MFL, caliper and impact logger, pipeline commissioning, drying, and nitrogen packing. Other services are chemical cleaning, on-line cleaning in gas pipelines using high volume separators, chemical de-scaling of heat exchangers, HVAC systems, valve servicing/ maintenance and supply of launchers/receivers, barrel doors and the like. BGT designs and installs valve interlocking systems for process control and also tamper prevention systems for facility and remote location protection.

A subsidiary company, PPA, manufactures various types of pipeline pigs; foam, mandrel, polyurethane systems, and supplies pigging accessories.

Visit PPSA's Web Site
www.ppsa-online.com
for more information and Hyperlinks to Members' Web Sites

Come to the next PPSA Seminar in Aberdeen, Scotland 14th November 2012 Visit www.ppsa-online.com for more information

Baker Hughes Process and Pipeline Services

Global Headquarters
2301 Oil Center Court, Houston, Texas 77073, USA
Tel: +1 281 230 7100 **Fax:** +1 281 230 7101
E-mail: Mark.Elliott@bakerhughes.com
www.bakerhughes.com/pps
Contact: Mark Elliott,
Global Business Development Manager

Western Hemisphere Operations
4101 Oates Road, Houston, TX 77228-3656, USA
Tel: +1 832 519 2000 **Fax:** +1 832 519 2001
E-mail: Derek.Clark@bakerhughes.com
Contact: Derek Clark,
Western Hemisphere Business Development Manager

Eastern Hemisphere Operations
1st Floor, Easa Saleh Al Gurg Building, Al Karama,
PO Box 61110, Dubai, UAE
Tel: +971 4 334 7239 **Fax:** +971 4 335 1851
E-mail: Stephen.Thornton@bakerhughes.com
Contact: Stephen Thornton,
Eastern Hemisphere Business Development Manager

The Baker Hughes Process and Pipeline Services group (PPS) offers pipeline services in three primary categories to help global operators improve pipeline efficiency, reduce product-to-market time, reduce HSE risk, and meet regulatory standards. Its services include pipeline pre-commissioning, flooding, hydrostatic testing, cleaning, drying and product commissioning; pipeline maintenance, including in-line filtration and separation, gel pigging, chemical cleaning, nitrogen purging, online pigging, temporary pumping packages and product transfer; and thirdly, pipeline inspection services that offer caliper, inertial geometry, cathodic protection surveys, metal loss using MFL technology and fit-for-purpose evaluations. Baker Hughes PPS services are available to the natural gas, crude oil, refined products and petrochemical industries in major oil producing areas across the globe.

CDRiA Pipeline Services Ltd

(Centrum Diagnostyki Rurociagow i
Aparatury Sp. z o.o.)
ul. Przasnyska 6B, 01-756 Warsaw, Poland
Tel: +48 22 101 56 60
E-mail: office@cdria.com **www.**cdria.com
Contact (PPSA & Sales): Zbigniew Czepułkowski

CDRiA Pipeline Services design and manufacture intelligent pigs and perform high quality pipeline inspections. Services provided include pipeline preparation and cleaning, multichannel internal geometry surveys and assessment of the technical state of pipelines with high resolution ultrasonic intelligent tools. The tools were validated by the German TÜV Rheinland Group and the Polish Office of Technical Inspection.

CDRiA Pipeline Services was formed by Oil Pipeline Operation Company "Friendship" comprising over 2500km of crude oil and product pipelines, and companies involved in the construction of smart pigs. The company is experienced in pipeline operation and is a highly qualified specialist in the fields of electronics, corrosion, mechanics and NDT.

Challenger Special Oil Services/Entrepose Contracting

165 Boulevard de Valmy, 92707 Colombes, France
Tel: +33 1 57 60 93 00 **Fax:** +33 1 57 60 93 01
E-mail: challengerbox@challenger-sos.com
www.challenger-sos.com **www.**entrepose.fr
Contact (PPSA & Sales): Patrick Balestra

Founded in 1982 and located in Paris, Challenger Special Oil Services, a subsidiary of Entrepose Contracting, provides a wide range of pipeline services to the oil and gas industries. To achieve optimum efficiency of pipelines, Challenger has developed its savoir-faire in leak detection (strength and leak tests, hydrostatic testing), intelligent pigging (calibration, thickness measurement, corrosion survey), pipeline dewatering and drying (vacuum, dry air, methanol), pipeline rehabilitation, pipe works (deviations, hot-tapping, repairs, relining of pipelines) and commissioning.

Challenger has developed a new and very successful pigging activity called "hard descaling" for petroleum companies.

Conducting studies for cathodic protection and for installation, general maintenance and engineering studies, Challenger provides operation surveys and maintenance consulting and is active in the research and development of new products and processes.

China Petroleum Pipeline Inspection Technologies Co. Ltd

No 166, Aimin East Road, Langfang City,
Hebei Province, P.R. China
Tel: +86 316 2073065 **Fax:** +86 316 2077274
E-mail: gdj_jiance@cnpc.com.cn
jc_liuzheng@cnpc.com.cn
www.cnpc.com.cn/gdj/cyqy/jsfwdw/jiance/gsjj.htm
Contact (PPSA & Sales): Xiao Yingjie

Founded in 1992, CPPI provides a full range of pipeline services world-wide. They include: pipeline cleaning, inline intelligent pigging (geometry/deformation, mapping, metal loss/corrosion) and fitness for purpose evaluations. CPPI employs specialists in pipeline operation, data analysis and integrity to serve all of its customers and to provide effective and efficient operations.

Control Devices, Inc

1801 N. Juniper Avenue, Broken Arrow,
OK 74012, USA
Tel: 1 918 258 6068 **Fax:** 1 918 251 9851
www.pigging.com
Contact (PPSA & Sales): Carlos Barretto,
Business Development Manager
Contact (Sales): Eric Farque, Vice President

CDI is a family-owned and operated company located in Broken Arrow, Oklahoma. They have been manufacturing the highest quality pipeline pig tracking and locating equipment since 1982. In fact, all of their products are designed and manufactured in house. Currently they employ 25 people including a full-time engineering staff. Recently, CDI has introduced the TRAXALL / LineStat Satellite Notification Service to the pig tracking industry. This revolutionary technology allows anyone to monitor their pig runs from any location on earth. CDI has agents located throughout the world.

Diascan Technical Diagnostics Center Open Joint-Stock Company

Kuibyshev Str, 7, 140501 Lukhovitsy, Moscow Region,
Russia
Tel: +7 496 635 09 14, +7 496 635 09 21
Fax: +7 496 635 09 13, +7 496 635 09 23
E-mail: postman@ctd.transneft.ru
Contact: Sergey V Ermish (General Director)

Diascan was formed in 1991 and currently inspects an average of 25,000 to 30,000km of pipelines each year.

The company's inspection tools detect and size defects with high accuracy and applicable software calculates strength and durability of pipes with defects.

Diascan has its own test loops with both artificial defects and spools with defects taken from live pipelines. This allows it to develop its own in-line inspection tools and to enhance data analysis methods. A hydraulic facility enables the company to calculate strength and operating life by pressurization and bending tests.

Diascan also provides the following services: visual measurement testing, ultrasonic thickness measurement, acoustic emission inspection, ultrasonic flaw detection of welds and X-ray inspection of welded seams.

Enermech Ltd

Enermech House, Howes Road, Aberdeen, AB16 7AG
Tel: +44 1224 7233900 **Fax:** +44 845 6386441
E-mail: mgibson@enermech.com
www.enermech.com
Contact (PPSA & Sales): Mary Gibson

EnerMech is an established international provider of mechanical services solutions to the energy services sector including pipeline and umbilical testing and precommissioning. They have extensive engineering offices, workshops, storage facilities, personnel and equipment resources in 17 locations in each of the key oil and gas markets.

FTL Technology Ltd

Bruntcliffe Avenue, Leeds 27 Business Park, Morley, Leeds LS27 0TG, UK
Tel: +44 113 252 1061 **Fax:** +44 113 252 2627
E-mail: warwickl@ftlseals.co.uk
www.ftltechnology.co.uk **www.**varipig.co.uk
Contact (PPSA): Warwick Lockwood
Contact (Sales): Steve Smith

FTL Technology is the designer and manufacturer of the patented "Varipig" wheeled suspension system for dual/multidiameter pipeline systems. Varipig projects include: 42" x 28", 20" x 26" x 20", 10" x 16" and 24" x 32". Varipig details and project references can be found at www.varipig.co.uk

Varipig provides true centreline running and low differential drive pressure combined with high efficiency and operational repeatability.

FTL Technology has many years experience in solving fluid sealing problems, as well as using its extensive elastomeric knowledge to offer engineered solutions to the oil and gas industry.

FTL Technology is accredited to ISO 9001:2000 and is qualified to the Achilles Joint Qualification System. It is also an accredited IIP company.

GD Engineering

Retford Road, Worksop, Nottinghamshire S80 2PY, UK
Tel: +44 1909 482323 **Fax**: +44 1909 477902
E-mail: gd@spx.com **www.**spxft.com
Contact (PPSA & Sales): Sean Hawe
sean.hawe@spx.com

GD Engineering
19191 Hempstead Highway, Houston,
Texas 77065-4702, USA
Tel: +1 281 807 2815 **Fax:** +1 281 807 2805
E-mail: evan.barclay@spx.com **www**.spxft.com
Contact (PPSA & Sales): Ginny McEvoy
Ginny.McEvoy@spx.com

GD Engineering, an SPX Brand, is a market leader in the design and manufacture of engineered pipeline pigging solutions to the oil, gas and process industries.

Their Bandlock™ 2 Closure range provides speed of operation with safety benefits. Used on process vessels such as, pig traps and filters, size range to 100" (2.5m) diameter, pressures to ASME #2500 (425 barg).

GD Engineering has many years experience in providing innovative closure designs for a wide range of process vessel applications.

The Pigalert Hi-T intrusive and the non-intrusive MAGAlert and ULTRAlert pig signaller range provide reliable pig/sphere passage indication.

Multiple Pig Launchers allow remote multiple pig launching without depressurisation.

The Company's quality system is approved to ISO 9001:2008 by LRQA and they feature in the FPAL and Achilles Joint Qualification System.

Visit PPSA's Web Site

www.ppsa-online.com

for more information and Hyperlinks to Members' Web Sites

Girard Industries

6531 N Eldridge Pkwy, Houston, Texas 77041, USA
Tel: +1 713 466 3100 **Fax:** +1 713 466 8050
E-mail: sales@girardind.com
www.girardindustries.com
Contact (PPSA): David Henry
Contact (Sales): Michael Henry

Girard Industries Europe Ltd
Unit 4, Riverside Place, Paddockholm Industrial Estate, Kilbirnie KA25 7JW, UK
Tel: +44 1505 684885 **Fax:** +44 1505 685424
Contact: John Simpson

Girard Industries began manufacturing pipeline cleaning pigs in 1968. The product range consists of steel mandrel pigs, solid cast polyurethane pigs, polly-pigs and polyurethane pipeline and meter prover spheres. Steel mandrel pigs include bi-di, cleaning, batching, gauging and displacement pigs configured with guide and seal discs, scraper cups, conical cups and/or scraper discs. Girard manufactures replacement cups and discs for most pigs available on the market.

Girard manufactures a complete range of solid cast polyurethane pigs. The Turbo® series consists of 2, 3 and 4 cup pigs with disc pigs ranging in size from 2" to 36". Pipeline and meter prover polyurethane spheres sized from 2" to 42" and include up to 5 different mold sizes per nominal pipe size. Frequently this allows “fill and run” without inflating thus extending the life and performance of the sphere. Neoprene and nitrile spheres are also available.

Polly-pigs range from bare swabs to heavy duty cleaning and scraping pigs. Girard also supplies Hi-T pigalerts, pig valves, launchers and receivers, and related pigging equipment.

Greene’s Energy Group

2705 Frick Road, Houston, Texas 77058, USA
Tel: +1 281 821 8469 **Fax:** +1 281 821 1081
www.greenesenergy.com
Contact (Sales): Cathy Goolsby
cgoolsby@greenesenergy.com
Contact (PPSA): Terry Delasalle
tdelasalle@greenesenergy.com

305 Pinehurst, Lafayette, LA 70508, USA
Tel: +1 337 232 2911 **Fax:** +1 337 232 8430
Contact (Sales): Shawn Ellis
sellis@greenesenergy.com

Greene’s Energy Group offers high quality pipeline pigs that are well designed, well maintained, come in a wide variety – traditional/specialty – and are available on short notice.

Whether for maintenance, enhanced productivity or pre-commissioning work, Greene’s is equipped to handle any size pipeline project – from 4" to 48" diameter lines. Greene’s provides complete turnkey services and specialized rental equipment to meet the needs of any project.

Greene’s provides pigging, hydrostatic testing, pipeline filling, dewatering, filtration, cleaning online and offline (mechanical/chemical), drying, nitrogen purge and testing, abandonment, umbilical testing, valve greasing, pig tracking, pig sales and ILI line preparation services, separation services, nitrogen services and torquing.

For more than 50 years Greene’s has provided expertise in helping O&G operators, construction companies and diving services keep their pipelines up and running.

Come to the next PPSA Seminar in Aberdeen, Scotland 14th November 2012 Visit www.ppsa-online.com for more information

Gulf Petrochemical Services & Trading LLC

Post Box 1633, Postal Code 114, Jibroo,
Sultanate of Oman
Tel: +968 24481438 **Fax:** +968 24489446
E-mail: gpsoman@omantel.net.om
www.gpsoman.com
Contact (PPSA): Alex Valloor +968 99369778
Contact (Sales): Nilesh Shah

Gulf Petrochemical Services & Trading LLC is a contractor commercially registered in the Sultanate of Oman for a number of activities such as engineering, procurement and construction (EPC) contracts for green-field and brown-field projects for facilities and pipelines, infrastructure projects, maintenance contracts for oil & gas facilities, integrity management services of cross country pipelines, pipeline rehabilitation and environmental services.

GPS is responsible for the maintenance of over 90% of oil and gas pipelines currently in operation in Oman. GPS owns one of the biggest fleet of plant and equipment in Oman and directly employs over 5000 multi-disciplined manpower. GPS is also active in UAE, Kuwait, Saudi Arabia and India.

Halliburton (Pipeline & Process Services)/ (Surestream Flow Assurance Services)

Don Facility, Howe Moss Crescent, Dyce, Aberdeen, AB21 0GN, UK
Tel: +44 1224 776715
E-mail: services@halliburton.com
services@surestream-fas.com
www.halliburton.com/pss **www**.surestream-fas.com
Contact (PPSA): Rhea Thornton
Contact (Sales): Robert Davidson
Tel: +44 1224 795275
Robert.Davidson@Boots-Coots.com

Halliburton (PPS) Norway
Eldfiskvegen 1, Tananger 4056, Norway
Tel: +47 51 83 7535 **Fax:** +47 51 83 83 83
E-mail: JanWilly.Kristiansen@Boots-Coots.com
Contact: Jan Willy Kristiansen

Halliburton's Pipeline & Process Services (PPS) department operates worldwide providing a full range of pre-commissioning, commissioning, decommissioning, chemical cleaning, umbilical and flow assurance services to the pipeline, construction and process system industries both onshore and offshore. Services include flooding, cleaning, gauging, decommissioning, mechanical pigging, gel pigging, dewatering, drying and conditioning, chemical cleaning, thermal cleaning, intrusive intervention and pressure jetting. Additional specialist services include subsea pigging, hydrotesting and seabed excavation. Nitrogen inerting, helium leak detection, bolt tensioning and video inspection services are also supplied.

Halliburton's SureStream Flow Assurance Service provides an integrated range of consultative, analytical, engineering and remediation solutions to address any flow assurance problems in pipelines and flowlines.

Hunter McDonnell Pipeline Services

Bldg 3, 9703 45 Avenue, Edmonton, Alberta, T6E 5V8
Tel: +1 780 436 4400 **Fax:** +1 780 989 0040
E-mail: sales@hmpsi.com **www**.hmpsi.com
Contact (PPSA): Shamus McDonnell

Founded in 1995, Hunter McDonnell (HM) Pipeline Services offers a range of technology-driven pipeline products and services to pipeline operators. They also offer third-party consulting, data management options and training seminars.

HM is a safety-conscious company dedicated to customer satisfaction. They offer trained technicians with an outstanding safety record in the industry. HM excels in challenging projects, and is prepared to quickly mobilize for any size pipeline pigging or direct assessment project. An in-house team of software programmers, IT and R&D personnel ensure complete project support.

An extensive inventory of pipeline pig tracking and ECDA equipment is kept on-hand and ready for service 24/7. This includes the ARMADILLO real-time pig tracking system (and AGM's) and the Spectrum XLI inspection system.

IK Stavanger

Fabrikkveien 21, PO Box 8018, Postterminalen, N-4068 Stavanger, Norway
Tel: +47 51 44 32 00 **Fax:** +47 51 44 32 01
E-mail: post@ik.no **www**.ik.no
Contact (PPSA): Staale Bilstad (Business Development Manager)
Contact (Sales): Peter Bjørnsen (Department Manager)

IK Stavanger is a Norwegian Company established in 1987 to supply the oil and gas industry with pipe and pipeline services and products.

IK has a highly skilled staff of graduated engineers and operators. IK have performed major investments in "state of the art" software including 3CAD, analytical tools and facilities to execute the work. IK comprises of four departments within a carefully selected range of niche disciplines, i.e. Custom Build (custom made subsea tools, equipment and operation), Rental Services (pigging products, local pressure test equipment and field support), Pipe Intervention (hot tapping and freeze plugs) and Torque Tension/Instrumentation (provision of bolting services/equipment and calibration of instruments).

IK has also a subsidiary, IK-PEI Ltd. (UK), specialized in pigging products.

IKM Testing AS

Ljosheimveien 14, 4050 Sola, Norway
Tel: +47 5164 9000 **Fax:** +47 5164 9001
E-mail: IKMtesting@IKM.no **www**.ikm.no
Contact (PPSA): Vidar Haugland
Contact (Sales): Jens Bolme and Johnny Feria

IKM Testing UK Ltd
Unit 47 Howe Moss Terrace, Kirkhill Industrial Estate, Dyce, Aberdeen, AB21 0GR, UK
Tel: +44 1224 725599 **Fax:** +44 1224 724657
E-mail: IKMProposals@IKMLtd.co.uk
Contact: Malcolm Harris & Lars Hallgren

IKM Testing Australia Pty Ltd
PO Box 547, Welshpool WA 6986, Australia,
33 Kewdale Road, Welshpool WA 6106, Australia
Tel: +61 8 9452 6100 **Fax:** +61 8 9452 6101
E-mail: IKMtesting.Australia@IKM-Group.com
www.IKM-group.com **www**.ikm.no
Contact: Pat Williams

IKM Testing with its 750 employees is a part of the IKM Group which has 2500 employees. IKM Testing specialises in providing pipeline services to the oil and gas industries. The head office is located in Stavanger, Norway with daughter companies in the United Kingdom (Newcastle and Aberdeen), Canada (St. John's and Halifax), Spain (Cadiz), Australia (Perth), Singapore, Indonesia, Thailand, Malaysia, Kazakhstan (Atyrau) and Brasil (Rio de Janeiro). IKM has been involved in on-/offshore development projects since 1989. It offers a safe and cost attractive alternative within pipe/pipeline services including: engineering, commissioning, pressure testing, nitrogen services, pigging, flooding, gel, waxing, drying, preservation, isolation, calibration, chemical cleaning, bolt services, cutting/bevelling/flange facing, video inspection and hot oil flushing. IKM Testing has a certified Quality Assurance system in accordance with ISO 9001:2008, OHSAS 18001:2007 and ISO 14001:2004.

Inline Services Inc

27731 Commercial Park Rd, Tomball, Texas 77375, USA
Tel: +1 281 401 8142 **Fax:** +1 281 401 8147
Toll Free: +1 888 973 0079
E-mail: sales@inlineservices.com
www.inlineservices.com
Contact (PPSA): Gary Smith, Harvey Diehl
Contact (Sales): Jessica Nichols

UK Office
PO Box 461, Horsham, West Sussex RH13 7ZT, UK
Tel: +44 1403 790959 **Fax:** +44 870 1321966
E-mail: sharvey@inlineservices.com
Contact: Steve Harvey

Inline manufactures and supplies purpose-built pigs for wax/scale removal, corrosion control and commissioning, including foam and mandrel pigs, urethane cups and discs, steel, stainless and plastic brushes, pig signalers, dust bags and closures. Inline also stocks on and off-shore electromagnetic and acoustical pig tracking equipment.

Inline's new product line includes the Speed Control Pig which is designed to clean high velocity gas pipelines without costly interruptions in flow rates and includes onboard electronics to record key pipeline data during the run.

Inline's professionals offer consulting services for any pipeline integrity application including corrosion control, data analysis and ILI support.

Inline Services also provides complete, custom-designed Process Pigging System packages for the process industry, both industrial and sanitary applications.

Visit PPSA's Web Site

www.ppsa-online.com

for more information and Hyperlinks to Members' Web Sites

Inpipe Products Ltd

Walkerville Industrial Estate, Catterick, North Yorkshire DL9 4RR, UK
Tel: +44 1748 834577 **Fax:** +44 1748 834121
E-mail: uksales@inpipeproducts.co.uk
expsales@inpipeproducts.co.uk
marketing@inpipeproducts.co.uk
general@inpipeproducts.co.uk
hire@inpipeproducts.co.uk
www.inpipeproducts.com **www.**inpipehire.com
Contact (PPSA): Emily Durkin
Contact (Sales): Peter Fretwell
(Director of Pigging & Services)
Gavin Newall
(Middle East, Director of Sales)
Simon Bell
(South America/Far-East, MD)
Contact: Shari Thompson
(Business Develpment Manager)

Middle East:
Abdel Hadi Abdullah Al-Qahtani & Sons Company
PO Box 20, Dammam 31411, Saudi Arabia
Tel: +966 3 826 1477 **Fax:** +966 3 826 9894
Contact: Mohammad Ashraf

Far East:
PJ Services PTE Ltd, Loyang Offshore Supply Base, Box No 5150, Loyang Crescent, Singapore
Tel: +65 654 53533 **Fax:** +65 654 58183
Contact: Azmi Nordin

iNPIPE PRODUCTS™ is an acknowledged world leader in the design, manufacture, supply and rental of pipeline maintenance equipment. Operating in the oil, gas, petrochemical and water industries many products are specified by most international operators and contractors.

As a company INPIPE PRODUCTS™ prides itself on innovation, quality and JIT delivery. Investment into R&D has resulted in the patenting of a number of products the first being an intrusive signaller registered in 1986 which continues to be acknowledged as a market leader worldwide.

iNPIPE PRODUCTS™ also offers the largest UK hire fleet of isolation tools, high pressure plugs and internal and flange type weld testers up to 42". iNPIPE PRODUCTS™ offer innovative easy to use tools intrinsically safe in design low-cost time-saving solutions.

Kleiss & Co bv

Scheepmakersstraat 17, 3334 KG Zwijndrecht,
PO Box 254, 3330 AG Zwijndrecht, The Netherlands
Tel: +31 78 6291313 **Fax:** +31 78 6291314
E-mail: info@kleiss.nl **www.**kleiss.nl
Contact (PPSA): Leo van Beugen
Contact (Sales): Cees de Haard

Kleiss & Co has manufactured and distributed pipeline equipment since 1967. The company provides in-house design, engineering, manufacturing and testing of pipeline pigs for all purposes, from 1" up to 100" and from soft foam up to sophisticated tools for cleaning. CAD facilities, computer and climate controlled manufacturing and process equipment, test facilities guarantee constant quality.

The company provides soft, medium and high density foam pigs, cup pigs, bidirectional pigs, flexible pigs, gauging pigs, brush pigs, magnetic pigs, pipeline spheres, FDA pigs for food and cosmetics, pencil brushes, polyurethane, neoprene, nitril, viton, EPDM and silicone pigs. Kleiss also supplies pig locating equipment, pig signalers, high friction pigs and ancillary materials for pipeline repair, coating, maintenance and installation.

Knapp Polly Pig Inc

1209 Hardy St, Houston, Texas 77020, USA
Tel: +1 713 222 0146 **Fax:** +1 713 222 7403
E-mail: knapp@pollypig.com **www**.pollypig.com
Contact (PPSA): Ken Knapp
Contact (Sales): Tim Owen

Mexico and Latin America:
Knapp Limpro Nacional SA De CV.,
PE Calles 199, APDO A-027, Guadeloupe,
NL Mexico 67150
Tel: +52 83 371717 **Fax:** +52 83 377836
Contact: Eng Sergio Cantu

Knapp Polly Pig Inc., the original manufacturer of the Polly Pig, has been manufacturing pipeline cleaners for over 40 years. The company's product lines, in addition to a full line of urethane foam pigs, include urethane cups (conical and scraper), discs, spheres, and several all-urethane pig designs such as the Ultra-Seal™, NOVA™, Polly Tri-Cup™, SUD pig, Ultra-Cast™, Polly-Cast™, Foam Disc, Hand-Launch™, Blackbelt™ and K-Disc™. Knapp also supplies steel mandrel assemblies.

Knapp serves the oil & gas, water & wastewater, chemical & food processing sectors of the piping industry. The company specialises in custom designs and materials to suit all applications. Products are available to be used in adverse cleaning situations, pipe size reductions, long distance pig runs, sour gas lines (with H_2S present), automatic pigging operations and other special procedures. The products are available in sizes up to 90 inch, and the company offers assistance to pipeline operators in optimising the cost and efficiency of pigging by analysing their current pigging procedures and making recommendations on improvements.

LTS, LLC

11932 Brittmoore Park Drive, Houston,
Texas 77041, USA
Tel: +1 832 467 4040 Fax: +1 832 467 4240
E-mail: kleaning@ltsenergy.com **www**.ltsenergy.com
Contact (PPSA & Sales): Kevin Leaning

LTS, based in Houston, Texas, was established in 1992 and is one of the world leaders in the design and manufacture of engineered solutions for high pressure pigging systems through 20,000psi used onshore and offshore and ultra deep applications. LTS has over 200 HP/HT systems installed around the world and represents 80% of all major GOM high pressure deepwater projects, and is a leader in the industry in pressure classes of 10,000psi and above.

LTS offers their own ClampTec® Closures, integrated barrel fabrication and supply, pigging valves and complete skid packages ranging from 6" through API 60" and through 20,000psi design pressures, used for onshore, offshore and subsea applications through 10,000ft water depths.

LTS Engineering Services include full R&D, FEED, design and detailed engineering featuring 3D solid modeling, piping and structural analysis as well as FEA to assist international operators and consulting engineers worldwide.

Lin Scan Advanced Pipeline & Tank Services

PO Box 62159, Dubai, UAE
Tel: +971 6 5262042 **Fax:** +971 6 5262043
E-mail: info@linscaninspection.com
www.linscaninspection.com
Contact (PPSA & Sales): Hisham
hisham@linscaninspection.com

LIN SCAN is a service provider for In-line inspection and pipeline integrity management support services. All their equipment is made in-house for 3" to 64" pipelines.

They are certified and accredited to ISO 9001:2008, TS/29001:2007, API Q1, 94/9/EC ATEX Directive and CE Marking.

They are involved in 3 core activities:

1. Technology inspection development such as MFL, TFI, Caliper, UT, INS, data logger. Also pre-inspection techniques including cleaning, gauging, removing dust (black powder) by cyclones, removing wax, pigging the "un-piggable", speed reduction and supply of pig traps.

2. Project management and field execution by API 1163 and ATEX certified field technicians.

3. Reporting using data analysis and assessments as per standards, ASME, DNV, SHELL-92 and as per API 1163, NACE, POF 2009, PENSPEN and clients' requirements. Integrity management support includes determining the threats and risks to integrity, updating the risk assessments and management plans and devising pipeline repair plans.

Come to the next PPSA Seminar in Aberdeen, Scotland 14th November 2012 Visit www.ppsa-online.com for more information

MACAW Engineering Ltd

Floor 2 - Q5, Quorum Business Park,
Newcastle upon Tyne, NE12 8BS, UK
Tel: +44 191 215 4010
E-mail: info@macawengineering.com
www.macawengineering.com
Contact (PPSA): Iain K Richardson, Senior Engineer
Contact (Sales): John Healy, General Manager/ Principal Consultant

Aberdeen Office
MACAW Engineering Ltd
3rd Floor Riverside House, Riverside Drive, Aberdeen, AB11 7LH, UK

México Office
MACAW Engineering Ltd
Leibnitz # 20 Int. 01/10, Col. Nueva Anzures, Ciudad de México, 11590, México, D.F

MACAW Engineering Ltd is a leading independent engineering consultancy working closely with global operators of oil & gas production facilities, pipelines and utility systems to reduce risk, maintain integrity and extend the service life of client assets.

Based in Newcastle (UK), MACAW Engineering Ltd employs over 60 full time staff comprising of principal consultants, senior engineers and engineers covering a multitude of disciplines including mechanical engineering, corrosion engineering, materials engineering, welding and mathematics.

With many of their Principal Engineering Consultants able to draw on more than 25 years of industry experience in materials, corrosion, welding and asset integrity, MACAW Engineering Ltd applies this knowledge to develop and provide cost-effective solutions to their clients across the energy sector.

NDT Systems & Services GmbH & Co. KG

Friedrich-List-Str. 1, 76297 Stutensee, Germany
Tel: +49 7244 7415 0 **Fax:** +49 7244 7415 97
E-mail: sales@ndt-global.com **www**.ndt-global.com
Contact (PPSA): Dr. Michael Beller
Contact (Sales): Ulrich Schneider

NDT Systems & Services (Americas)
2835 Holmes Road, Houston, Texas 77051, USA
Tel: +1 713 799 5401 **Fax:** +1 713 799 5406
E-mail: usa@ndt-global.com
Contact (Sales): Carol Piovesan

NDT Systems & Services GmbH & Co. KG offer global pipeline inspection and integrity services. The inspection services for the onshore and offshore pipeline industry make use of a full range of advanced in-line inspection tools for the detection, sizing and locating of geometric anomalies, metal loss defects and cracks.

Inspection technologies utilised include ultrasound, high resolution magnetic flux leakage and eddy current. Combo and multi-technology tools offer multiple inspection solutions in a single run. NDT also operate a fleet of mapping and leak detection tools.

The engineering resources of NDT ensure state-of-the-art inspection tools and the capacity to offer special solutions for a wide range of inspection tasks, including high pressure, high temperature and deep water application.

The services provided include full integrity assessment, fitness-for-purpose analysis, run comparisons and corrosion growth studies.

In addition NDT offer LinaView® Professional, an integrated software tool for data analysis, data visualization and pipeline integrity management, incorporating a wide range of tools relating to risk analysis and asset maintenance.

N-SPEC®

A division of Coastal Chemical Co. LLC/Brenntag
Coastal Chemical Co., 6133 Highway 90 East,
Broussard, LA 70518, USA
Tel: +1 337 261 0796
www.n-spec.com
Contact (PPSA): Randy Roberts
rroberts@brenntag.com
Contact (Sales): Eric Greenwood

Brenntag Specialities Oil & Gas Department
Donker Duyvisweg 44, 331.68 BM Dordrecht,
The Netherlands
PO Box 872, 3300 AW Dordrecht, The Netherlands
Tel: +31 78 654 4944 **Fax:** +31 78 654 4986
E-mail: pverkiel@brenntag.nl
www. Brenntag.com **www.**N-SPEC.com
Contact: Peter Verkiel
Mobile: +31 6 533 70954

N-SPEC® provides portable high pressure separators for on line pigging. The N-SPEC® products/applications provide turnkey pigging services, specialised pipeline treating chemical products, application engineering, and laboratory analysis of pipeline liquids and solids. N-SPEC® pipeline cleaners/applications are a trademarked group of products/applications designed to remove deposits from the pipe wall and improve their transport out of the pipelines/vessels. These products greatly improve the cleaning of pipelines with or without the use of various types of mechanical pigs. N-SPEC® products/applications are proven to be effective in removing a variety of solids including iron sulphide, paraffin, asphaltenes, sand, and crystalline salt. The product family is also particularly useful in cleaning gas processing vessels such as separators, dehydrators, and sweetning equipment. N-SPEC® cleaners are safe to handle and environmentally acceptable. N-SPEC offers a full range of pipeline treating products including corrosion inhibitors, scale inhibitors, biocides, cleaners and paraffin inhibitors.

Narmada Offshore Constructions Pvt Ltd

Plot No. D-29/5, MIDC-TTC Area, Turbhe,
New-Mumbai – 400 705, India
Tel: +91 22 2763 1224 **Fax:** +91 22 2763 5661
E-mail: d.bhandari@narmadaoffshore.in
narmadaoffshore@gmail.com
www.narmadaoffshore.in
Contact (PPSA & Sales): Deo Bhandari

Narmada Offshore Constructions Pvt Ltd., established in 1994, is a Mumbai, India based company specialising in the provision of services to the oil & gas sector for pre-commissioning & commissioning of pipelines either sub-sea or onshore, including cleaning, gauging, hydro-testing, swabbing, drying, inerting etc. They also undertake EGP Survey (caliper pigging), vacuum drying. To date they have successfully tested almost 5000kms of various sizes (from 4" to 60" diameter) pipelines in offshore field and cross country pipelines. They have worked for almost all operators / EPC contractors.

Narmada Offshore owns a bank of specialised equipment / instruments and has a qualified technical support staff of almost 60. Their equipment bank and staff can undertake 5 projects at different locations at any given time.

Netherlocks Safety Systems BV

J. Keplerweg 14, 2408 AC Alphen aan den Rijn,
The Netherlands
Tel: +31 172 471 339 **Fax:** +31 172 427858
E-mail: fgielissen@netherlocks.com
www.netherlocks.com
Contact (PPSA): Frank Gielissen
Contact (Sales): Frans Mallo

Netherlocks supplies safety products for the oil & gas industry. Their products are used by most of the major end users in the sector to help create a safer working environment. Netherlocks are market leaders in mechanical interlocks and also manufacture several other safety products.

Pigging is one of the main applications for safety interlocks. As part of an interlocking sequence, locks on the closure and different valves, prevent opening the door when it is unsafe. All critical valves can only be operated when the closure is fully closed and locked.

A pigging operation is recognized as highly dangerous and even deadly. Locking systems are recommended to avoid human error and, subsequently, dangerous incidents.

Oceaneering Pipetech AS

PO Box 163, Lonavegen, N-5342 Straume, Norway
Tel: +47 5631 6000 **Fax:** +47 5631 6001
www.fo.oceaneering.com
Contact: Paul Cooper
pacooper@oceaneering.com
Mobile: +47 971 11089
Contact (PPSA & Sales): Rolf Spørkel
rsporkel@oceaneering.com
Mobile: +47 415 19668
Contact: General enquiries
fo@oceaneering.com

Oceaneering Pipetech AS, is a subsidiary of Oceaneering International which is a global oilfield provider of engineered services and products, primarily to the offshore oil and gas industry, with a focus on deepwater applications.

Oceaneering Pipetech offers the industry in house developed ultrasonic technologies (UT) for internal and external inspection of pipelines and subsea assets.

Oceaneering Pipetech AS also provides the market with tailor made inspection solutions for both piggable and unpiggable pipelines, rigid and flexible pipelines using high resolution ultrasonic scanners and self-propelled pigs. Core activities are ultrasonic and visual in-line inspection.

Oceaneering Pipetech has previously been known as AGR Pipetech.

Visit PPSA's Web Site

www.ppsa-online.com

for more information and Hyperlinks to Members' Web Sites

Online Electronics Ltd/ Online Valves Ltd

Headquarters:
Online House, 266 Auchmill Road, Aberdeen
AB21 9NB, UK
Tel: +44 1224 714714 **Fax:** +44 1224 710101
E-mail: sales@online-electronics.com
info@online-electronics.com
www.online-electronics.com
Contact (PPSA): Romana Adamcikova
Contact (Sales): Claire Gribble
Contact (Valves): David Sim

Online Electronics Asia Pacific Pte Ltd
Singapore
18 Boon Lay Way, #03-130 TradeHub 21,
Singapore 609966
Tel: +65 6795 6792 **Fax:** +65 6795 6056
E-mail: info@online-electronics.com.sg
Contact: Ross Gribble

Online Electronics
Dubai
PO Box 5445, Office in 5WA 228,
West Wing Building 5A, Dubai Airport Free Zone,
Dubai, UAE
Tel: +9714 299 3945
Tel: +9714 299 3948 (Direct)
Fax: +9714 299 3946
E-mail: cy@online-electronics.com
Contact: Chris Yates

Online Electronics Ltd (OEL), formed in 1996, specialise in the design and manufacture of pipeline pig monitoring equipment and high-tech pipeline data communication systems. OEL products incorporate acoustic, electromagnetic, magnetic and ultrasound technologies covering subsea and land applications with an innovative approach to pig locating, signalling, data logging, through pipe wall communications and data transfer to remote locations. OEL also pride themselves in bespoke design projects. All products, including ATEX compliant products, can be provided at short notice.

Online Valves Ltd (OVL)
OVL provides a fast response and delivery of Pipeline Valves to the Oil, Gas & Petrochem Industries Worldwide. OVL supplies valves in all types, sizes, pressure classes, materials; manual and actuated, topside and subsea, including associated products.

3P Services GmbH & Co KG

Lenzfeld 9, 49811 Lingen, Germany
Tel: +49 591 71007-0 Fax: +49 591 71007-11
E-mail: info@3p-services.com **www**.3p-services.com
Contact (PPSA & Sales): Basil Hostage
hostage@3p-services.com

In-Line inspection using MFL (metal loss), GEO (geometric) and DMR (direct magnetic response) are available for 3" to 42" pipelines at 3P Services. Customer applications to inspect pipelines that are considered “difficult to pig” or even “unpiggable” are a speciality of the company. There are tools for conventional (free swimming), for bi-directional (pump-in/ pump-out), and pull-through operation.

3P Services provides associated services including feasibility studies, cleaning, geometric inspection, post-inspection support etc. The company was founded in 1992, is privately owned and based in the oil fields of NW-Germany.

Come to the next PPSA Seminar in Aberdeen, Scotland 14th November 2012 Visit www.ppsa-online.com for more information

PII Pipeline Solutions, a GE Oil & Gas and Al Shaheen joint venture

Western Europe & Africa
Atley Way, Cramlington, Northumberland,
NE23 1WW UK
Tel: +44 191 247 3200 **Fax:** +44 191 247 3101
www.geoilandgas.com/pii
Contact (PPSA): Laure Brooks
laure.brooks@ge.com

Central Europe & CIS
Lorenzstrasse 10, D-76297 Stutensee, Germany
Tel: +49 7244 732219 **Fax:** +49 7244 732123
Contact: Jürgen Ehrhardt
juergen.ehrhardt@ge.com

North America
7105 Business Park Road, Houston,
Texas 77041-4040, USA
Tel: +1 713 849 6311 **Fax:** +1 713 937 0740
Contact (Sales): Eric Quick
eric.quick@ge.com

PII Pipeline Solutions is one of the industry leaders in inspection and integrity services for gas and liquid pipelines in every known environment and operating condition. From in-line inspection and integrity engineering, to revolutionary new services such as UltraScan™ Duo for crack assessment and SmartScan™ for unpiggable pipelines, and powerful data management tools, they provide the comprehensive technologies, skills and experience needed to confidently determine the present and future condition of a pipeline. Their solutions go beyond defect detection to proactive risk assessment and threat management to maintain a balance of safety and productivity while helping pipeline operators meet stringent regulations. PII Pipeline Solutions operates as a 50:50 joint venture between GE Oil & Gas and Al Shaheen Energy Services, a wholly owned subsidiary of Qatar Petroleum.

PNS – Pipeline Nitrogen Services bv

Phileas Foggstraat 65, NL-7825AL Emmen,
The Netherlands
Tel: +31 591 669088 **Fax:** +31 591 668150
Email: PNederveen@pns-services.com
www.pns-services.com
Contact (PPSA & Sales): P B Nederveen

PNS UK Ltd
Foxbridge Way, Normanton, Wakefield, WF6 1TN, UK
Tel: +44 1924 898250 **Fax:** +44 845 604 0282
Contact (Sales): Gareth Turner
gturner@pnsuk.com

PNS – Pipeline Nitrogen Services bv was founded in 2006 in Emmen. The Netherlands headquarters supports offices in Germany, France, Italy, Spain, Libya, Croatia and China in engineering and operations. PNS employs about 50 people worldwide as staff personnel. The company specialises in pipeline cleaning by means of mechanical pigging utilising specially designed pigs, or chemical cleaning using the latest reactive chemistry. These services are used for pipeline de-contamination and commissioning projects including pipeline drying, gauging and inspection.

THE PPSA BUYERS' GUIDE

A breakdown of the products and services provided by the Members will be found on the next two pages. The following is an explanation of some of the less well known terms and items which are listed:

1. "Utility pigs" are used for a variety of purposes such as internal pipe wall cleaning, condensate removal, water fill for pressure testing, gauging, dewatering, drying, commissioning etc. There are many different types available for use in uni-directional, bi-directional and multidiameter pipelines. Utility pigs have been divided into the four different forms in which they are made:

   a) "Mandrel pigs" are assembled from a number of component parts, and spare parts are available.

   b) "Foam pigs" are moulded from polyurethane foam with various configurations of solid polyurethane strips and/or wire bristles, studs etc. permanently bonded to them.

   c) "Solid cast pigs" are moulded in one piece – usually from polyurethane.

   d) "Spheres" are hollow balls, usually made from polyurethane and inflated to the optimum diameter with water/glycol.

2. "Hyperbaric spheres" and "High DP pigs" are used mainly on subsea pipelines as a temporary plug while the two ends of the line are welded together.

3. "Pig signals" indicate the passage of a pig. Intrusive types are mechanically actuated via a trigger or plunger which protrudes into the line. Non-intrusive and subsea signals may employ magnetic, ultrasonic or radioactive techniques.

4. "Pig locators" are used to locate a pig which may or may not be in motion.

5. "Sphere flow tees" are specially designed to allow a sphere to pass an offtake without stalling. They may be called simply "Sphere tees" or "Flow tees".

6. "Sphere lifters" are usually in the form of tongs or suction devices.

7. "Pig suspension systems" are designed to keep a pig in the centre of a pipeline. They usually comprise spring-loaded skids or wheels and are used for inline inspection tools, or other relatively heavy pigs, and in multi-diameter pipelines.

8. There are two main methods of finding metal loss (corrosion): Magnetic flux leakage (MFL) and ultrasonics (UT). Another emerging technology involves the use of eddy currents.

Further, more detailed information on pigs and pigging will be found in the PPSA book entitled: "An Introduction to Pipeline Pigging" which is available from the publishers:

Scientific Surveys Ltd
PO Box 21, Beaconsfield, Bucks HP9 1NS UK
Tel: +44 1494 675139
Fax: +44 1494 670155
E-mail: jt@scientificsurveys.com

PIGGING PRODUCTS & SERVICES ASSOCIATION

One Day Seminar on "Meeting the Challenges of Pipeline Pigging"
Aberdeen 14th November 2012

At the time of going to print the programme was not yet finalised but full details will be available soon.

To find out more and book your place, please contact the Secretary at:

PPSA, PO Box 30, Kesgrave, Ipswich, Suffolk, IP5 2WY, UK

Tel: +44 1473 635863 Fax: +44 1473 353597 E-mail: ppsa@ppsa-online.com

An International trade association serving the pipeline industry

N-SPEC®	▲	▲	▲	▲								●										●	●	●	●	●	●	●		●	●												●	●					▲	▲			
Narmada Offshore Constructions Pvt Ltd																						●	●	●	●																										
Netherlocks Safety Systems BV													●																																		●				
Oceaneering Pipetech AS																									●	●				▲	▲	●	▲	●	●	●	●	●	●	●	●	●	●	●	●	●	●	●					
Online Electronics Ltd / Online Valves Ltd								●	●	●	●			▲																●	●					●		●						●			●					
3P Services GmbH & Co. KG								●	●	●	●															●				●			●		●	●				●	●	●		●	●	●	●					
PII Pipeline Solutions																									●	●	●			●		●	●	●	●	●	●	●		●	●	●		●	●	●	●	●	●	●				
PNS – Pipeline Nitrogen Services bv	▲	▲	▲	▲	▲	▲	▲	▲	▲	▲	▲	●	▲						●	●		●	●	●	●	●	●	●	●	●	●	●	▲	▲	▲	●	▲	●	●	●	▲	▲	▲	●	●	●	●	●	●	●	▲	▲		▲	●
PSI Pipeline Services International GmbH & Co. KG	▲	▲																				●	●	●	●	●		●		●						●		●																
Penspen Integrity																										▲				▲		▲	▲	▲	▲	▲	▲			▲	▲	▲	▲	●	●	●	●	●	●	●					
Pigs Unlimited International, Inc	●	●	●	●			●	●	●	●	●	●	▲	▲		●	▲	▲	●			▲	●		●	●		●	▲	●														●	●	●	●				●	●	●	●	▲
Pigtek Limited	●	▲						●	●	●									●	●					●	●				●														●	●	●	●				●			●	
Pipeline Engineering	●	●	●	●		●	●	●	●	●	●	●	●	●	●	●	●	●	●	●	●	●	●	●	●	●				●	●	●						●			●		●	●	●	●	●	●	●		●			●	●
Pipeline Pigging Products Inc	▲	●	▲	▲			▲	▲		▲	▲												●	●	●	●		●		●															●	●	●				●				
Pipeline Services LLC (PLS)	▲	▲	▲	▲	▲	▲	▲	▲	▲	▲	▲	▲	▲	▲	▲	▲	▲	▲	▲	▲		●	●	●	●	●	●	●		●	●	●	●	●	●	●		●		●	●		●	●		●	●	●	●		▲	▲		●	●
Pipelines 2 Data (P2D) Ltd	●	●				▲	▲	▲	▲	▲	▲	●	▲						●	●		▲	▲	▲	●	●	●	●		●	▲	▲	▲	▲	▲	●	▲	▲	▲	●	●	●	●	●	●	●	●	●	▲					
Pipesurvey International CV	●					●	▲	▲	▲	▲	▲														●	●	●	●	●	●	●		●	●	●	●	▲		●	●	●		●	●	●	●	●			●	●				
Pipetech Corporation Ltd	●	●	●	●	▲	▲	▲	▲	▲	▲	▲			▲					▲	▲	▲	▲	▲	▲	▲	▲		▲	▲	●								▲							●	●	●				●				
Pipeway International, Inc	▲	▲	▲	▲			▲	▲	▲	▲	▲	▲	▲																	▲			●		●	●				●	●		●			●	●	●	●						
PolyEurope International Ltd	●	●		●	●	●	●		●	●	●	●				●	●		●		●	●								●	●														●	●	●				●				
Quest Integrity Group, LLC																										●				●				●	●	●	●			●								●	●		●				
RAS Rohrleitungs- und AnlagenService GmbH & Co. KG	●	▲						▲		▲	▲	●							●			●	●		●	●		●		●						●		●						●	●	●				●	▲			
Robbins & Myers Energy Services Group													●	●																																							
Romstar Sdn Bhd	▲	▲	▲																						●	●				●			●	▲	▲	●	▲	▲		▲	●		▲		●	●	●	●	●		●	●			
ROPLAST	●	●						●	●	●	●								●										●																●	●	●							
ROSEN Group	●	▲	●	▲	▲	▲		▲	▲	▲	▲	▲	▲	▲	▲	▲	▲	▲	●	●	▲	●	●	●	●	●	▲	▲	▲	●	▲	●	●	●	●	●	●	●	●	●	●	●	●	●	●	●	●	●	●	●	▲	▲	●	●	●
STATS Group																															●	●							●					●		●	●							
Serck Services (Gulf) Ltd							▲	▲	▲			●	▲	▲					▲	▲																																		
Spetsneftegaz NPO JSC							●	●		●					●					●					●	●				●			●		●	●	●			●				●	●	●	●	●	●	●	●			
T D Williamson	●	●	●	●	●	●	●	●	●	●	●	●	●	●	●	●			●	●	●	●	●	●	●	●	●	●		●	●	●	●		●	●		●		●	●		●	●	●	●	●	●	●	●	●	●	●	●
TRAPIL																										●				●		●		●		●		●						●	●	●					●			
Technipipe	▲	▲								▲												●	●	●	●	●		●					▲	▲	▲	▲	▲				▲			●	●			●						
Tianjin Greentsing Pipeline Scin & Tech	●	●	●	●	●		●	●		●		●	●								●	●	●	●	●																			●	●	●				●	●	●	●	●
Topline Limited	▲	▲	▲	▲						▲	▲											●	●	●	●	●	●	●		●		●	▲	▲		▲	▲	▲			▲		▲	●					●	●	▲				
Tracerco							●	●	●	●	●																			●					●	●	●	●																
Trans Asia Pipeline Services FZC	●																					●	●	●	●	●	●	●		●	●					●															●	●			
Trident Underwater Engineering (Systems) Ltd								●	●	●	●																			●	●							●			●			●									●		
VP Engineers	●	●	●	●	▲	▲	▲	▲		▲		▲	▲																																						●	●			
Vee Kay Vikram & Co	●	●	●	●			●	▲	●	●	●	●	●	●					●			●	●		●	●												●		●											●			
Weatherford Pipeline & Specialty Services	●	▲	●	●	▲	●	▲	▲	▲	●	▲	●	▲						●		▲	●	●	●	●	●	●	●		●	●	●	●	●	●	●	●	●	●	●	●	●	●	●	●	●	●	●		●				

PIGGING PRODUCTS & SERVICES ASSOCIATION

BUYERS' GUIDE

Note: *Inspection companies can generally arrange for the pipeline to be cleaned/ prepared prior to inspection.*

● Manufacturer &/or Service Company

▲ Distributor

	PIPELINE PIGS						PIPELINE PIGGING COMPONENTS AND EQUIPMENT															PIPELINE PIGGING SERVICES											IN LINE INSPECTION SERVICES											CONSULTANCY SERVICS						INDUSTRIAL PIGGING				
	Mandrel pigs	Foam pigs	Solid cast pigs	Spheres	Hyperbaric spheres	High DP (plugging) pigs	Pig signals – intrusive	Pig signals – non-intrusive	Pig signals – subsea	Pig locaters – onshore	Pig locaters – offshore	Pig/sphere traps	Closures & Interlocks	Pig/sphere launch valves	Sphere launch pins/flaps	Sphere flow tees	Diverters	Convergers (Wyes)	Pig handling systems	Pig Suspension Systems	Sphere lifters	Testing	Drying	Commissioning	Cleaning – general	Cleaning – pre-inspection	Gel pigging	Slug (batch) inhibition	Insitu internal line coating	Pig tracking/locating	Isolating/plugging	Pipeline repair	Metal loss/corrosion (MFL)	Metal loss/corrosion (UT)	Metal loss/corrosion (other)	Geometry	Crack detection	Leak detection	Photographic/video	Bend detection	Profile/Mapping	Spanning/line cover	Smart Utility Pigging	Feasibility studies	Pig/system design	Pig development	Pig testing/trials	Defect assessment	Fitness for purpose assess	Safety	Pigs	Components/fittings	Controls	System Design	Installation
A.Hak Industrial Services BV																						●	●	●	●	●	●	●	●	●	●	●	●	●	●	●	●	●	●	●		●	●	●	●	●	●	●					●	●
Alchemy Oilfield Services Ltd																						●	●	●	●	●	●	●			●																				●				
Apache Pipeline Products	●	●	●				●		●	●																				▲																					●				
Applus RTD																																		●	●	●	●	●	●	●	●	●	●	●	●	●	●	●	●					
Aubin Limited																							●	●	●	●	●	●			●	●																			●				
BG Technical Ltd	●	●	●	●	▲	▲	▲	▲		▲	▲	▲	▲	▲					▲			●	●	●	●	●	●	●		●	●	●	●		●	●	●	●		●	●		●	●	●	●	●			●	●	●		●	●
Baker Hughes Process and Pipeline Services																						●	●	●	●	●	●			●	●		●		●	●	●			●	●	●	●				●								
CDRiA Pipeline Services Ltd										●																				●				●		●				●	●						●	●			●	●				
Challenger Special Oil Services/Entrepose Contracting	▲	▲	▲	▲	▲	▲						▲	▲									●	●	●	●	●	●	●	●	●	●	●	●	●	●	●	●	▲	●	●		●	●	●	●	●	●	●	●	●	▲	▲	●	●
China Petroleum Pipeline Inspection	●	●	●				●			●		●		●					●			●	●	●	●	●			●	●	●	●	●			●	●	●		●	●			●	●	●	●	●	●	●	●	●	●	●
Control Devices, Inc								●	●	●	●																																												
Diascan Technical Diagnostics Center OJSC							●			●															●	●				●			●	●	●	●	●			●	●	●			●	●	●	●	●	●					
Enermech Ltd																						●	●	●	●	●	●				●													●			●								
FTL Technology Ltd	●																			●																								●	●	●	●				●				
GD Engineering							●	●	●			●	●		●																																								
Girard Industries	●	●	●	●			▲	▲	▲	▲	▲		▲	▲					▲		▲																							●	●					●	●			
Greene's Energy Group	●	▲	●	▲	▲	▲	▲	▲	▲	▲	▲	▲										●	●	●	●	●	●	●		●	●		▲	▲	▲	▲	▲			▲	▲		▲	●	●	●	●			●	●				
Gulf Petrochemical Services & Trading LLC	▲	▲	▲	▲			▲	▲		▲		▲	▲	▲	▲	▲			▲	▲		●	●	●	●	●		●	●	●	●	●	▲	▲	▲				▲					▲						▲	▲	●	●	
Halliburton (Pipeline & Process Services)	●	●	●	●	●	●	●	●	●	●	●	●	●	●	●	●	●	●	●	●		●	●	●	●	●	●	●		●	●					●		●	●	●	●	●	●	●	●	●	●	●	●	●		●	●
Hunter McDonnell Pipeline Services	●	▲	▲	▲				●		●												●			●	●				●													●	●	●	●	●	●	●	●				
IK Stavanger	▲	▲	▲	▲	▲	▲	▲	●	●										●			●									●	●											●	●	●	●								
IKM Testing AS	▲	▲	▲	▲	▲	▲	▲	▲	▲	▲	▲	▲	▲	▲	▲	▲	▲	▲	▲	▲	▲	●	●	●	●	●	●	●	●	●	●	▲	▲	▲	▲	●	▲	●	●	●	▲	▲	●	●	●	●	●	●	●	▲	▲	▲	●	●
Inline Services Inc	●	▲	▲	▲		▲	▲	●	▲	▲	▲	▲	▲	▲	▲	▲	▲	▲	▲		▲									▲			●	●	●	▲	▲	▲		▲	▲				●	●	●				▲	▲	▲	●	
Inpipe Products Ltd	●	●	●	●	●	●	●	▲	●	●	●	●	●		●		●		●		●				●	●				●	●												●	●	●	●				●	●	●	●	●
Kleiss & Co. bv	●	●	●	●	▲	●	▲	▲	▲	▲	▲	▲	▲	▲	▲	▲	▲	▲	▲	▲	▲											●	▲	▲	▲	▲			▲	▲	▲	▲	▲	●	●	●	●				●				
Knapp Polly Pig Inc	●	●	●	●		●	▲	▲		▲	▲																																			●	●	●		●					
LTS, LLC (Was: LTS, Inc)							▲	▲	▲			●	●	▲	●				●	●												▲												●	●		●		●		●	●	●	
Lin Scan Advanced Pipeline & Tank Services	●	●	●	●	●	●				●	●	●	●			●		●	●					●	●	●		●		●			●	●	●	●	●	●	●	●	●	●	●	●	●	●	●		●	●	●	●	●
MACAW Engineering Ltd																																											●				●	●						
NDT Systems & Services GmbH & Co. KG	▲	▲	▲	▲						▲		▲	▲	▲					▲			●	●	●	●	●	●	▲		●	▲	●	●	●	●	●	●	●	●	●			●	●	●	●	●	●		●			●	●

PSI – Pipeline Services International GmbH & Co KG

Thyssenstr. 2, 49744 Geeste-Dalum, Germany
Tel: +49 5937 980908 215
Fax: +49 5937 980908 190
Mobile: +49 171 387 9201
E-mail: m.strohecker@pressuretest.de
www.pressuretest.de
Contact (PPSA & Sales): Michael Strohecker

PSI – Pipeline Services International, provides special services for pipeline pre-commissioning, rehabilitation and pipeline inspection. Pipeline inspection is a part of PSI, which uses its own fleet of single, and the new multi-channel caliper tools for baseline surveys, passage control for third party intelligent inspection tools and the usual inspection of deformation of the inner diameter of pipelines. The advantage of the new multi-channel system is to give additional information about the o'clock position and the shape of the detected indication.

PSI also provides the following services: hydrostatic testing by water, air or gas; chemical/mechanical cleaning; pipeline drying by air, nitrogen, or vacuum; intelligent pigging; leak detection; construction/sale of pigs; supervision of all above mentioned services.

Penspen Integrity

Units 7 & 8, St Peter's Wharf, St Peter's Basin,
Newcastle upon Tyne, NE6 1TZ, UK
Tel: +44 191 238 2200 **Fax:** +44 191 275 9786
E-mail: pigging@penspen.com
www.penspenintegrity.com
Contact (PPSA): Paul Birkinshaw (Newcastle)
Tel: +44 191 238 2200
Contact: John Dixon (Aberdeen)
Tel: +44 1224 288 700
Contact: John Simon (London)
Tel: +44 208 334 2700
Contact: Razwan Arshad (Abu Dhabi)
Tel: +971 2 6792526
Contact: Peter Smith (Houston/Mexico)
Tel: +1 713 402 8120

Penspen Integrity provides pipeline and pigging technical consultancy services and a focussed capability on integrity management and risk assessment of onshore and offshore pipelines. Penspen Integrity is independent of construction and ILI vendors and provides best practice advice and solutions to pipeline operators.

Pigging services: Inspection consultancy including: inspection needs assessment; smart pigging strategies, engineering assessment; design and remedial works; pig design and specification; tendering; contract management and operational supervision.

Integrity services: Integrity assessment; repair and rehabilitation, pipeline integrity management systems; risk, reliability and RBI; assessment of geo-hazards; Pipeline Defect Assessment Manual (PDAM); FEA, fracture and fatigue; specialist training.

Penspen Integrity has 70 technical specialists experienced in operations, fieldwork and integrity assessment.

The Penspen Group is an established international engineering company providing; pipeline routing and design consultancy; construction support; asset management and O&M services through GreyStar.

Pigs Unlimited International, Inc

23802 FM 2978, Suite C-1, Tomball,
Texas 77375, USA
Tel: +1 281 351 2749 or 800 578 7436
Fax: +1 281 351 4658
E-mail: sales@pigsunlimited.com
www.pigsunlimited.com
Contacts (PPSA): A Keith Wagner
Contacts (Sales): Karen Armstrong

Pigs Unlimited International, Inc. supplies pipeline pigs, pigging components and equipment, cleaning and related services and consultancy. Its manufacturing division produces a full line of pigs from ½"–96" including foam pigs, steel mandrel pigs (cup, disc, brush, blade), solid cast pigs (sphere, cup, disc) for various functions including drying, batching, cleaning, dewatering and displacement. It also offers pigging related components and equipment, including launchers, receivers, pig detectors, trackers, pigging valves, diverters and closures.

Its service division performs testing, drying, cleaning, pig tracking, insitu coating and leak detection. It also offers customer designed classes for educating clients and employees both new to pigging operations, or needing to implement new pigging programs.

Pigtek Limited

Unit 2, Langham Park, Mansfield Road, Corbriggs, Chesterfield, Derbyshire, S41 0GG, UK
Tel: +44 1246 850220 **Fax:** +44 1246 856191
E-mail: sales@pigtek.com **www.**pigtek.com
Contacts (PPSA): Ralph Hyslop & Richard Kershaw
Contacts (Sales): Ralph Hyslop & Richard Kershaw

Pigtek supply specialist pigging equipment and services for applications where proprietary "off the shelf" equipment will not perform efficiently.

Pigtek products and services have evolved from years of on-site international pigging experience.

Products are available on a sale or hire basis and include: dual/multi diameter pigs, heavy-duty magnetic cleaning pigs, heavy duty brush pigs, HDR de-scaling pigs, advanced by-pass pigs, non-intrusive pig signallers, pig tracking and location equipment.

On-site services include pipeline proving and gauging, advanced pipeline cleaning for flow improvement, pre-inspection proving and cleaning, pig tracking, stuck/lost pig location / removal, training / supervision during pigging operations.

Development services include specialist pig design, pig verification trials, feasibility studies, developing pigging procedures.

Full technical support is assured and Pigtek are certified to ISO 9001:2008.

Pipeline Pigging and Integrity Management Conference and Exhibition

11–14 February 2013

PPIM Houston

PLEASE SEE:
www.clarion.org
for details

Pipeline Engineering

Headquarters:
Gatherley Road, Catterick Bridge, Richmond, North Yorkshire DL10 7JQ, UK
Tel: +44 1748 813000 **Fax:** +44 1748 813501
E-mail: sales@pipelineengineering.com
www.pipelineengineering.com
Contact (PPSA): Andrew Cargill
Contact (Sales): Andy Marwood
+44 1784 813554
andrew.marwood@pipelineengineering.com
Contact (Sales): Alyson Slater
+44 1748 813593
alyson.slater@pipelineengineering.com

Middle East Office:
Tel: 971 4 8866128 **Fax:** +971 4 8866129
Email: enquiries@pe-middleeast.com

Far East Office:
Tel: +65 6225 7118 Fax: +65 6225 7119
Email: enquiries@pe-fareast.com

Pipeline Engineering design, test and manufacture pipeline pigging and flow assurance products and provide pipeline services, engineering and project management services.

PE supplies a full range of pipeline pigging tools, pipeline spheres, pig launchers and pig receivers, quick opening closures and pig signallers. PE also designs and produces bespoke client specific polyurethane products. With fabrication, machining, polyurethane moulding and testing facilities, PE provides a turnkey service for clients.

Industries serviced include oil, gas, process and renewables, where a strong reputation has been built for quality, expertise and providing project specific and innovative product and service solutions. PE provides appropriate solutions for customers' unique requirements.

PE is an ISO 9001, ISO 14001 and BH OHSAS 18001 registered company.

Pipeline Pigging Products Inc

PO Box 692005, Houston, Texas 77269, USA
11238 Timber Tech Ave. Tomball, TX 77375, USA
Tel: +1 281 351 6688, (800) 242 7997 (US)
Fax: +1 281 255 2385
E-mail: shannonkerr@pipepigs.com
www.pipepigs.com
Contact (PPSA & Sales): Shannon Kerr,
Spencer Cubage

Pipeline Pigging Products Inc, a company with over sixty years of combined pig manufacturing experience, offers a full line of flexible polyurethane foam pigs, commonly known to the trade as "poly pigs". Available in drying, wiping and scraping types for pipe sizes below 2" to over 78" in diameter.

The company also has a pipeline cleaning division, Flowmore Services. This group which was founded in 1977, provides PPP customers with the technical "know-how" to use their pipeline cleaning products properly. In addition, Flowmore provides constant product feedback to the manufacturing group in order to ensure the products meet the tough needs of the pipeline cleaning industry.

Pipeline Services LLC (PLS)

PO Box 4500, Abu Dhabi, United Arab Emirates
Tel: +971 2 555 45 13 **Fax:** +971 2 555 39 93
E-mail: mail@pls.ae
Contact (PPSA & Sales): Patrick Hivert and
Mohamed Habbouly

Founded in 1960 and established in the United Arab Emirates in 1979, Pipeline Services LLC (PLS) has an in-depth knowledge of the performance requirements set by the regional oil and gas operating companies and EPC contractors. The expertise, resources and professionalism of their engineers and technicians provides efficient performance in all areas. Completing projects on time to the entire satisfaction of their customers is a key strength.

Pipeline Services LLC (PLS) expertise and package services covers: Pipeline pre-commissioning, commissioning, decommissioning, rehabilitation, hot tapping & stoppling; Cathodic protection systems including designs and engineering, procurement and installation, commissioning, surveys, external coating defects assessment, maintenance and rehabilitation; GRE/GRV/GRP piping systems including stress analysis, shop fabrication, field installation, pipe system repairs, retrofit, rehabilitation and reinforcement.

Pipelines 2 Data (P2D) Ltd

Units 3 & 4, The Technology Centre, Claymore Drive,
Bridge of Don, Aberdeen, AB23 8GD, UK
Tel: +44 1224 708778 **Fax:** +44 1224 708588
E-mail: sales@pipelines2data.com
www.pipelines2data.com
Contact (Sales): Stephen Mayo
steve.mayo@pipelines2data.com
Contact (Sales): David Cockfield
david.cockfield@pipelines2data.com

Pipelines2Data (P2D) is an Aberdeen based oil and gas service company providing pipeline and pigging support services.

With over 20 years industry experience P2D can provide engineering solutions, management and ATEX certified 'smart' pipeline pigging tools to maximise efficiency and safety over a pipelines operational life.

P2D has identified an industry need to provide intelligent pipeline cleaning and maintenance. Supported with tailored pipeline pigging solutions utilising multi-channel data logging, debris mapping and measurement, active speed control systems, advanced geometry surveys and pipeline profiling as part of a pipeline operators on-going flow assurance and integrity management strategy.

P2D also provide a range of consultancy services providing solutions for the issues associated with the integrity management of onshore and offshore pipeline systems.

Pipesurvey International CV

Schrijnwerkerstraat 13, 3334 KH Zwijndrecht,
PO Box 117, 3330 AC Zwijndrecht, The Netherlands
Tel: +31 78 610 1428 **Fax:** +31 78 610 2128
E-mail: info@pipesurveyinternational.com
www.pipesurveyinternational.com
Contact (PPSA): Peter van Beugen
Contact (Sales): Joost Verbrugge

Pipesurvey International provides high-end inspection and cleaning services for pipelines. Its innovative inspection tools, developed in-house, provide accurate information about the structural integrity of piggable and non-piggable pipelines. Their team of engineers cover all the required disciplines of mechanical and electrical engineering, software development, physics, materials science, defect assessment, NDT technology, pipeline operations and pigging experience.

Pipesurvey offers MFL inspection with compact-size flexible and bidirectional tools, suitable for short radius

bends and high wall thickness. It also offers ultrasonic pipeline inspection, accurate multichannel geometric pipeline inspection, GPS pipeline mapping using IMU, defect assessment and fitness-for-purpose analysis, free-swimming camera inspection, pipeline cleaning using Kathar chemicals or gel pigging and removal of black powder, wax and scale.

Pipetech Corporation Ltd

3311–114 Avenue SE, Calgary, AB T2Z 3X2, Canada
Tel: +1 403 287 3558 **Fax:** +1 403 243 6279
www.pipetechcorp.com
Contact (PPSA & Sales): Terry Lotwin
terry@pipetechcorp.com

Pipe-tech Corporation has been focused on providing pipeline Pigging products and consulting services for 25 years. Every pipeline system has its challenges and Pipe-tech Corporation's technicians can help clean and maintain virtually any production system, gathering system or transmission line. They work with all levels of a customer's integrity management team to help them analyze and diagnose problems and offer recommendations for determining a cost-effective solution for the pipeline cleaning project. Their broad range of premium pigging products evolves continuously to keep pace with customer needs and changes in the industry.

Pipeway International, Inc

23802 FM 2978 Ste D-1, Tomball, Texas 77375, USA
Tel: +1 281 357 4848 **Fax:** +1 281 351 4658
E-mail: sales@pipeway.com **www.**pipeway.com
Contact (PPSA & Sales): Allen Pennington

PipeWay has 14 years experience in ILI inspection. It was formed through the licensing of technology developed by Petrobras to solve integrity monitoring issues in its onshore and offshore pipelines and plant piping. The high resolution MFL equipment for piggable pipelines is controlled by powerful software that allows the integration of prior run data from both PipeWay and competitors. Patented Porcupine technology is used to detect and measure internal defect anomalies that are problematic for all MFL tools. These defects include channeling corrosion, general corrosion, erosion, general wall thinning and encrustations that can hide bacterial corrosion colonies. GIP is MFL technology applied externally to the pipeline for use in non-piggable pipelines, plant piping, pier piping and for localised prove up.

PolyEurope International Ltd

1 Grindon Way, Heighington Business Park,
Newton Aycliffe, Co. Durham, DL5 6SH, UK
Tel: +44 1325 307508
E-mail: sales@polyeurope-int.com
www.polyeurope-int.com
Contact (PPSA): Ray Schofield
Contact (Sales): Paul Robinson

PolyEurope bv, The Netherlands
Address: Kruiwiel 14, 4191 TJ Geldermalsen,
The Netherlands
Works: Nieuwsteeg 34, 4196 AM Tricht,
The Netherlands
Tel: +31 345533812
E-mail: sales@polyeurope.nl
www.polyeurope.com

IK Stavanger as, Norway
Fabrikveien 21, PO Box 8018 Postterminalen, N-4068
Stavanger, Norway
Tel: +47 51443200
E-mail: peter.bjornsen@ik.no
www.ik.no

In 2011, PolyEurope bv, Tricht The Netherlands in liaison with The IK Group Stavanger, Norway established a new manufacturing facility based at Newton Aycliffe, Co. Durham – PolyEurope International Limited.

PolyEurope International provides pipeline pigging and accessory products and also tailored solutions using AutoCad Inventor design technology. It also operates a brand new hire fleet of fully certified weld testers, high pressure test plugs and isolation tools.

PolyEurope International's management team has more than a century of experience in the pigging and pipeline industry. Substantial investment in new plant and machinery has put it at the forefront of polyurethane and foam production. Its machine and fabrication workshop facility is totally self-sufficient.

Visit PPSA's Web Site

www.ppsa-online.com

for more information and Hyperlinks to Members' Web Sites

Quest Integrity Group, LLC

17146 Feathercraft Ln, Suite 200, Webster, Texas 77598 USA
Tel: +1 281 786 4700 **Fax:** +1 281 786 4719
E-mail: marketing@questintegrity.com
sales@questintegrity.com
www. QuestIntegrity.com
Contact (PPSA): Barry Fisher
Tel: +44 1429 277742
Contact (Sales): Stefan Papenfuss/Margo Reyna
Tel: +1 281 786 4700

Quest Integrity Group provides highly accurate, technology-enabled inspection and assessment solutions to the pipeline industry. These solutions are particularly applicable to unpiggable and difficult to inspect pipelines. The InVista™ high fidelity ultrasonic inspection technology accommodates 3–24 inch diameters, is bi-directional and provides 100% overlapping coverage of geometry and metal loss features in a single pass. LifeQuest™ pipeline provides advanced fitness-for-service assessment using inspection data. The solution provides MAOPr for the entire pipe length and follows API 579-1/ASME FFS-1 local thinning assessment methodology. Quest Integrity Group is built upon a foundation of leading edge science and technology that has innovated and shaped industries for more than forty years, and is focused on empowering its clients' operating and maintenance decisions.

Come to the next PPSA Seminar in Aberdeen, Scotland 14th November 2012 Visit www.ppsa-online.com for more information

RAS Rohrleitungs- und AnlagenService GmbH & Co. KG

Lanzstrasse 5, 49716 Meppen, Germany
Tel: +49 5931 98 50 00 **Fax:** +49 5931 98 50 50
E-mail: info@ras-pipeline.de
www.ras-pipeline.de
Contact (PPSA): Caspar Wessels
Tel: +49 5931 98 50 15
c.wessels@ras-pipeline.de
Mobile: +49 170 342 37 58
Contact (Sales): Daniel Benscheidt
Tel: +49 5931 98 50 24
d.benscheidt@ras-pipeline.de
Mobile: +49 170 540 79 42

RAS Rohrleitungs- und AnlagenService GmbH & Co. KG provides globally pre-commissioning, rehabilitation as well as de-commissioning services on- and offshore. Representing almost 20 years of experience the service range includes pipeline cleaning, testing with liquid or gaseous mediums, drying with air, nitrogen or vacuum, inerting etc. and pigging for multiple applications such as cleaning, batching, leak detection and caliper pigging.

Since early 2011 RAS has provided pipeline inspection by means of its own GPI-tool, providing true multi-channel measurement, XYZ-mapping etc.

RAS was founded in 1992, has 60 employees and is certified in accordance to ISO9001:2008 and SCC** by Det Norske Veritas.

Robbins & Myers Energy Services Group

110586 Highway 75 N., Willis, Texas 77378, USA
Tel: +1 936-890-1064 **Fax:** +1 936-890-9595
E-mail: angel.santos@robn.com
www.RMENERGY.com
Contact (PPSA): Angel Santos
Contact (Sales): Mike Hester
Tel: +1 281-460-0793
Tel: +1 936-856-9192

Robbins & Myers Energy Services Group has a history of providing innovative solutions to the oil and gas explorations and recovery industries, as well as niche industrial markets.

With more than 60 years of proven reliable field success and state-of-the-art manufacturing, outstanding

engineering, superior quality control procedures and complete service after the sale, its YALE® quick open closures and SENTRY® closures provide productivity, durability and safety.

Robbins & Myers Energy Services Group is dedicated to providing customers with solutions that help them extend service life, reducing maintenance expense, allowing smooth and easy operation and preventing the possibility of injury during pipeline or vessel servicing.

Romstar Sdn Bhd

No 8 Jalan 5/91A, Taman Shamelin Perkasa,
56100 Kuala Lumpur, Malaysia
Tel: +603 9282 3434 **Fax:** +603 9282 4434
E-mail: romstar@romstargroup.com
www.romstargroup.com
Contact (PPSA): Norizan Ibrahim,
Group Director Corporate Services
norizan.ibrahim@romstargroup.com
Contact (Sales): Goh Kha Chai,
General Manager Pipeline Division
khachai.goh@romstargroup.com
Contact (Sales): Baharom Hamzah,
Group Managing Director
baharom.hamzah@romstargroup.com
Contact (Sales): Mohd Razali Mohd Nazir,
Group Executive Director
razali.nazir@romstargroup.com

Romstar offers a full range of pipeline related services, from standard pre-inspection related services-cleaning, gauging, enhanced cleaning (for more difficult lines), to high resolution inspection services deploying intelligent pigs to measure metal loss, internal and external corrosion, coating loss, mechanical deformations and many other features without interrupting the pipeline transportation process.

Romstar possess in-house research and development capabilities and develops its own data interpretation software known as ROMSOFT which is capable of producing pipeline integrity reports for clients with precision and accuracy.

Romstar manufactures cleaning pigs and other polyurethane products through its Polymer Division.

ROPLAST

Am Seitenkanal 8, 49811 Lingen, Germany
Tel: +49 591 9136 150 **Fax:** +49 591 9136 130
E-mail: info@roplast.de **www**.roplast.de
Contact (PPSA): Michael Magerstaedt
Contact (Sales): Gunther Blitz,
sales@roplast.de

ROPLAST, the systems house of the ROSEN Group, develops and manufactures products and systems using high performance RoPlasthan® elastomers. ROPLAST's product range includes: Easy Clean™ and UltimateClean™ pipeline cleaning tools (ATEX), cups & discs, transmitters, data loggers, electronic pig detectors, sensors, rollers, elastomer bearings, vibration dampers, clamps, valve insulation plates, diabolo rollers, buffers, wheel chocks, fasteners, custom products and systems.

RoPlasthan® is a unique family of non-cellular polyurethane elastomers for demanding applications. It features outstanding mechanical properties combined with a widely extended range of thermal, hydrolytic, and chemical resistance and shows excellent dynamic behaviour even under extreme conditions.

The newly developed RoCoat™ pipe interior coating based on RoPlasthan® technology provides high abrasion resistance and wall adhesion strength.

ROSEN Group

info@roseninspection.net

Headquarters
Obere Spichermatt 14, 6370 Stans, Switzerland
Tel: +41 41 618 0300 **Fax:** +41 41 618 0319
E-mail: info@roseninspection.net
Contact: Wolfgang Krieg, Manager Corporate Marketing

Operating Companies

ROSEN Asia Pacific
1, Jalan Jurubina U1/18,
HICOM Glenmarie Industrial Park,
40150 Shah Alam Selangor, Malaysia
Tel: +60 3 5569 9000 **Fax:** +60 3 5569 6000
E-mail: rosen-asiapacific@roseninspection.net
Contact: Nazlee Ahmad Muzir,
Regional Marketing Manager

ROSEN Brazil
Rua Aguiar Moreira, 346 - Bonsucesso,
CEP 21041-070 Rio de Janeiro-RJ, Brazil
Tel: +55 21 3977 5524 **Fax:** +55 21 3977 5526
E-mail: rosen-rio@roseninspection.net

ROSEN Canada
5020 12a Street S.E., Calgary, Alberta, T2G 5K9,
Canada
Tel: +1 403 269 1190 **Fax:** +1 403 204 8490
E-mail: rosen-calgary@roseninspection.net
Contact: Daryl Ronsky, General Manager

ROSEN Europe
Zutphenstraat 15, 7575 EJ Oldenzaal, The Netherlands
Tel: +31 541 671 000 **Fax:** +31 541 671 130
E-mail: rosen-oldenzaal@roseninspection.net
Contact: Erik Cornelissen, General Manager

ROSEN Mexico
Calle 2 No. 100, Col. Lecheros, Boca del Rio, Veracruz,
C.P. 94295, Mexico
Tel: +52 229 923 2430 **Fax:** +52 229 923 2431
E-mail: rosen-veracruz@roseninspection.net
Contact: Gunter Sundag, General Manager

ROSEN Middle East
PO Box 61408, Jebel Ali Free Zone, Dubai, UAE
Tel: +971 4 881 4495 **Fax:** +971 4 887 2032
E-mail: rosen-dubai@roseninspection.net
Contact: Mohammed Jaarah, General Manager

ROSEN USA
14120 Interdrive East, Houston, Texas 77032, USA
Tel: +1 281 442 8282 **Fax:** +1 281 442 8866
E-mail: rosen-houston@roseninspection.net
Contact: Chris Yoxall, General Manager

Please find further information on the ROSEN website:
www.roseninspection.net

The ROSEN Group was created to meet the challenging need to inspect complex and sensitive engineering structures such as oil and gas pipeline systems and above-ground storage facilities.

ROSEN operates in more than 100 countries worldwide and offers a full range of products and services to the oil & gas industry covering pipe diameters from 3" up to 64" for any length or configuration (e.g. 1.5 D bends, dual diameter pipelines, multi-diameter pipelines).

Pipeline cleaning tools and accessories, in-line cleaning, high-resolution geometry inspection, XYZ mapping, high-resolution metal loss inspection, customized in-line inspection, EMAT crack detection and coating disbondment, multi-diameter pipeline inspection, leak detection, robotic inspection, optical inspection, plant and facility inspection, hydrostatic testing and commissioning, data services, asset integrity management support, asset integrity management software, pipeline-, plant- and facility rehabilitations.

Visit PPSA's Web Site
www.ppsa-online.com
for more information and Hyperlinks to Members' Web Sites

STATS Group

STATS House, Tofthills Way, Midmill Industrial Estate, Kintore, Aberdeen, AB51 0QG, UK
Tel: +44 1224 772461 **Fax:** +44 1224 772491
www.statsgroup.com
Contact (PPSA & Sales): Dale Millward
dale.millward@statsgroup.com

Canada
STATS Group International Inc, 5303 82 Avenue, Edmonton, Alberta, Canada, T6B 2J6
Tel: +1 780 462 0221 **Fax:** +1 780 462 0230
E-mail: canada@statsgroup.com
Contact: Stephen Rawlinson, General Manager

Middle East
STATS (UK) – Abu Dhabi,
3rd Floor Corniche Tower Building, Corniche Road, Abu Dhabi
Mobile: +971 56 772 0756
E-mail: me@statsgroup.com
Contact: Angus Bowie - Regional Director

Far East
No 8 Eu Tong Sen Street, #15-96 The Central, Singapore 059818
Tel: +65 6225 4181 **Fax:** +65 6225 9495
E-mail: chris.lilley@statsgroup.com
Contact: Chris Lilley, Business Development Manager

STATS Group are a trusted partner in providing pipeline isolation services, their dedicated team offer a consultation service to assist operators in assessing the optimum solution for their pipeline isolation requirements. Their comprehensive range of products and services provide the highest practical pipeline isolation integrity for the application.

STATS extensive product range allows for isolations to be undertaken while the system remains live and at operating pressure, enabling inspection or maintenance work to be carried out safely and efficiently. STATS have designed and manufactured a number of world-beating products, which have led major operators to reassess how they manage intervention and isolation projects.

Headquartered in Aberdeen, Scotland, STATS Group operates across the world through a network of branch offices and agencies.

Serck Services (Gulf) Ltd

Industrial Area 12, Sharjah, United Arab Emirates
Tel: +971 6 50826600 **Fax:** +971 6 5582734
Email: info@serckgulf.com **www.**serckgulf.com
Contact (PPSA): Mel Gosney
Contact (Sales): Jayamohan VP

Serck Services are a British owned and managed heat exchanger manufacturer and service provider who have been operating in the Middle East for over thirty five years. Part of the UK based, Unipart Group of Companies who employ 10,000 personnel worldwide, Serck have become one of the leading international heat transfer providers in the region with a global customer base.

The fabrication of Pig launchers and receivers is undertaken at its UAE manufacturing facility, supported by a technical engineering function including a full mechanical design capability utilizing PV Elite 2011 in accordance with ASME VIII Div 1, ASME B31.3, B31.4 & B31.8.

Serck have manufactured pig launchers from 12" to 46" for an international cliental including: BP, Saipem, Belleli, SBM and Lamprell.

Spetsneftegaz NPO JSC

12, Ulitsa Bolshaya Ostroumovskaya, 107014, Moscow, Russia
Tel: +7 499 268 08 14 / 268 23 23
Fax: +7 499 269 11 07
Contact (PPSA & Sales): Yury A Dergausov
dyalex@mail.ru
Olga A Cherkashina
olgacherk@yahoo.com

Spetsneftegaz NPO JSC, in-line inspection operator for Gazprom JSC, for 19 years, invents, develops and produces high resolution electronic magnetic, ultrasonic ILI tools and cleaning pigs – diameters 6" to 56" – for gas, oil and product pipelines onshore and offshore, including: EMAT (electromagnetic acoustic ILI tools to detect and size extra small SCC cracks and disbanded coating zones), MFL, MFL+ ("introscopes" for photographic inspection of inner pipeline surfaces), TFI, electronic geometry ILI tools with built-in XYZ mapping system, demagnetizing tools, ILI tools (stress meters) for locating and measuring pipeline stress zones.

The company's Scientific and Production Base, the Computer ILI Data Treatment Centre is located in Ekaterinburg. Final reports in English are to international standards. Spetsneftegaz works in Russia, CIS countries, the EU, Argentina, India and the Middle East.

T D Williamson

Pigging Products, In-Line Inspection & Bundles Services

Faraday Rd, Dorcan Way, Swindon, SN3 5HF, UK

Tel: +44 1793 603600 **Fax:** +44 1793 603601

www.tdwilliamson.com

Contact (Sales): Daniel Hyland (pipeline services)
Daniel.Hyland@tdwilliamson.com

Contact (Sales): Abel Lopes
abeljoao.lopes@tdwilliamson.com

Contact (Sales): Mark Hemming
mark.hemming@tdwilliamson.com

North America Pigging Products

PO Box 1121, Tulsa, Oklahoma 74101, USA

Tel: +1 918 447 5400 **Fax:** +1 918 664 7091

Contact: Eric Freeman (Technical)
eric.freeman@tdwilliamson.com

Contact (Sales): Amber Taylor
amber.taylor@tdwilliamson.com

Contact (Sales): Kent Harris
ki.harris@tdwilliamson.com

North America Pipeline Services

PO Box 1286, Tulsa, Oklahoma 74101, USA

Tel: +1 918 447 5500 **Fax:** +1 918 447 5550

Contact (PPSA): Larry Payne
larry.payne@tdwilliamson.com

Contact (Sales): Lloyd Pirtle
lloyd.pirtle@tdwilliamson.com

Contact (Sales): Nick Landon
nick.landon@tdwilliamson.com

TDW Offshore Services AS

Fabrikkveien 15, P O Box 8011, 4068 Stavanger, Norway

Tel: +47 51 44 32 40 **Fax:** +47 51 44 32 41

Contact (Sales): Jacek Kacperski
jacek.kacperski@tdwilliamson.com

TDW Offshore Services UK

12 Albyn Terrace, Aberdeen, AB10 1YP, UK

Tel: +44 1224 627666 **Fax:** +44 1224 627143

Contact (Sales): Gordon Blair
gordon.blair@tdwilliamson.com

Far East Asia Pacific

No. 4 Tech Park Crescent, Singapore 638128, Singapore

Tel: +65 636 48520

Contact (Sales): Edgar Lewis
Edgar.Lewis@tdwilliamson.com

Contact: Thinagaran Subramaniam
(Technical and Operations)
Thinagaran.Subramaniam@tdwilliamson.com

T.D. Williamson, one of the recognized leaders in pipeline equipment and services, delivers safe integrity solutions for onshore and offshore applications worldwide. TDW brings you more than 90 years of extensive experience and expertise in hot tapping and plugging, pipeline cleaning, geometry and integrity inspection, pigging and non-tethered plugging pig technology services for any pressurized pipeline system. TDW partners with you to ensure pipeline service projects are completed safely and on time with a broad range of quality products, services and technical capabilities. TDW is committed to fulfilling your needs by delivering performance-based solutions on time, anywhere in the world.

TRAPIL

1, rue Charles-Edouard Jeanneret, 78260 Poissy, France

Fax: +33 1 39 28 47 10

www.trapil.fr/fr/presta_controle.asp

Contact (PPSA): Marc Radisson
Tel: +33 1 39 28 47 80
mradisson@trapil.com

Contact (Sales): Stéphane Bénichou
Tel: +33 1 39 28 47 14
sbenichou@trapil.com

TRAPIL was established in 1950 and is the oldest and largest refined products pipeline operator in Europe. Operations include Le Havre/Paris pipeline system and many other civil and military networks throughout France. It represents some 4800 km of pipeline and 160 pumping and delivery stations. There are also more than 850 000 cubic meters of storage tanks.

To monitor and maintain the integrity of this pipeline network, TRAPIL has developed a range of instrumented pigs and other specific products. This combination of operational experience and instrumented pig applications enables TRAPIL to provide solutions to many pipeline inspections and leak detection/location problems.

The services provided include acoustic measurement for leak detection and ultrasonic pigging for metal loss features, corrosion and geometric anomalies detection.

Technipipe

ZA L'Agavon, 21 Avenue Lamartine,
13170 Les Pennes Mirabeau, France
Tel: +33 4 42 02 02 35 **Fax:** +33 4 42 02 02 36
E-mail: info@technipipe.com
www.technipipe.com
Contact (PPSA): Jean-Claude Picard
Contact (Sales): Alain Remignon

Established in early 1990, Technipipe specialises in the engineering, control and maintenance of pipelines. Technipipe offers a wide range of services to pipeline contractors and operators: pipeline engineering, construction and maintenance consulting, construction supervision, design, supply of cathodic protection systems, hydrostatic testing, commissioning, pigging, cleaning, drying and purging. These services are provided worldwide, from Technipipe's head office and its two branches in France, by experienced engineers and technicians.

Technipipe also supplies cleaning pigs and offers intelligent pigging services through various representatives' agreements.

Tianjin Greentsing Pipeline Scin & Tech Development Co Ltd

No. 8 Taiyuan Road, Jingbin Industrial park,
Langfang Development District, HeBei Province,
Tianjin Post: 301712, China
Tel: +86 22 22190663 **Fax:** +86 22 22190662
E-mail: lq@pigging.cn **www.**pigging.cn
Contact (PPSA & Sales): Lin Ling / Linda Lin

Founded in 2002, Tianjin Greentsing (GT) specializes in the design and manufacture of pipeline pigging, inspection and maintenance equipment. Tianjin Greentsing Pipeline Scin &Tech Development Co Ltd is its wholly-owned subsidiary.

Its main products include: pipeline pigging equipment, pressure pipeline fittings and pipeline inner inspectors. Its main technical services include pipeline inspection and pigging engineering.

GT imported the automatic casting machine, big machining facilities and raw materials. Its products are sold to the Middle East and Europe and were approved by foreign experts during oil pipeline pigging in Sudan, Libya and Russia. Its equipment and services are widely used in China's oil pipeline market and West-East natural gas transmission project construction.

Topline Limited

40 Birabi Street, GRA 1, Port Harcourt, Nigeria
Tel: +234 84 462638 **Tel:** +234 803 4071017
E-mail: info@toplinelimited.net
www.toplinelimited.net
Contact (PPSA & Sales): Chinedu Maduakoh
c.maduakoh@toplinelimited.net

Western Nigeria
Flat 5, Malle Estate, Off Orhuwhorun Road,
PO Box 772 Udu Effurun, Delta State, Nigeria
Tel: +234 803 375 1321

Topline Limited, established in 1982, provides pipeline cleaning, pipeline descaling, pipeline integrity surveys and inspection, cathodic protection, pipeline coating, valve maintenance and replacements, manifold maintenance, GRE piping and pumping services in the oil and gas industry.

The company has a team of Nigerian and expatriate engineers with several years of international and local experience.

Topline also has a relationship with Weatherford Pipeline and Specialty Services TAPECOAT Inc., USA, and VAL-TEX Houston, USA for the provision of pipeline and valve integrity management planning and related services.

Come to the next PPSA Seminar in Aberdeen, Scotland 14th November 2012 Visit www.ppsa-online.com for more information

Tracerco

Tracerco UK (part of Johnson Matthey plc):
Pavilion 11, Coxwold Way, Belasis Hall Business Park, Billingham, Cleveland, TS23 4EA, UK
Tel: +44 1642 375500 **Fax:** +44 1642 370704
E-mail: tracerco@tracerco.com
Contact (PPSA): Nicola Porter
Contact (Sales): Fraser Thomson

Tracerco USA
4106 New West Drive, Pasadena, Texas 77507, USA
Tel: +1 281 291 7769 **Fax:** +1 281 291 7709
Contact: Scott Vidrine
Contact: Paul Hewitt

Tracerco Asia
Lot 27, Jalan PJU 3/47,
Sunway Damansara Technology Park,
47810 Petaling Jaya, Selangor, Kuala Lumpur, Malaysia
Tel: +603 7803 4622 **Fax:** +603 7803 9312
www.tracercoasia.com
Contact: Robert Yong
robert.yong@tracerco.com

Tracerco is a world leading industrial technology company providing unique and specialised detection, diagnostic and measurement solutions.

Its techniques provide a rapid and reliable in-situ visualisation of assets in challenging environments.

Tracerco's pig tracking systems provide safe, fast, reliable effective and accurate subsea pig tracking, and hence control of pig positioning and pig location. A stuck or 'lost' pig or tool can lead to significant financial losses for pipeline operators. Rapid pig location and effective pig tracking systems ensure that time is saved in locating any lost or stuck pigs.

Field proven, advanced technologies deliver real time solutions and are a vital component in the optimum management of pipeline commissioning services through to operational pigging and onwards to decommissioning activities.

Trans Asia Pipeline Services FZC

Plot No.4M-25, Phase 2, Hamriya Free Zone,
Sharjah, UAE
Tel: +971 6 5269166 **Fax:** +971 6 5269167
E-mail: tapsdubai@gmail.com
www.transasiapipelines.com
Contact (PPSA & Sales): D Surendranath,
Managing Director

Trans Asia Pipeline Services FZC, an offshoot of Narmada Offshore Construction (Pvt) Ltd., India, works in the growing oil and gas petrochemical industry in the Middle East. Trans Asia provides a full spectrum of pipeline services including; flooding, cleaning, gauging, hydro testing, dewatering, drying, commissioning, gel pigging and caliper pigging. The company has recently embarked on the manufacture of pigs, pig accessories and pig closures and offers a pipeline inspection service on the general condition of pipelines.

Trident Underwater Engineering (Systems) Ltd

4 Flairs Avenue, Arbroath, Angus, DD11 5DY, UK
Tel: +44 1241870442 **Fax:** +44 7092216752
www.tuesystems.com
Contact (PPSA): Ran MacDonald
ran@tuesystems.com
Contact (Sales): Cheryl Stewart

TUE (Systems) Limited has been one of the leaders in the field of non intrusive pig signalling and bi-directional through pipe communication systems for a quarter of a century. Its products are in daily use in the UK and international oil and gas industry both surface and subsea.

The company also specialises in leak location in gas and water pipelines, with their own R&D capabilities/test facilities and offshore research vessel. TUE (Systems) intends to participate largely in the area of multi-role sensors for pipeline IRM and to continue its policy of total reliability of all of its products.

VP Engineers

No. 79 (Old No. 29/9) Valmik Street, Thiruvanmiyur,
Chennai 600 041, India
Tel: +91 44 2496 0736/0776
Fax: +91 44 2440 5152
E-mail: vpeiso9001@gmail.com **www.**vpengineers.in
Contact (PPSA): N Srinvasan
Contact (Sales): S Krishna Kumar

VP Engineers manufacture specialized industrial products for refineries, petrochemicals & processing plants.

VP Engineers' products for pigging are cleaning pigs, batching pigs, gauging pigs, bi-di pigs, commissioning pigs, foam pigs, criss-cross foam pigs, heavy duty foam pigs, swabbing pigs, de-watering pigs and magnetic pigs.

They also provide customised Pigs – with varieties of spring loaded brushes, circular brushes, silicon carbide strips, tungsten carbide studs, carbon and stainless steel wire bristles attached to the steel mandrel/ aluminium mandrel and foam bodied pigs with or with out PU elastomer coatings.

Other pipeline related products offered by VP Engineers include casing insulators/spacers, casing end seals, pipe end caps, monolithic insulation joints and ring joint gaskets.

Vee Kay Vikram & Co

"VKV House", 'D' Shivalik Business Center,
Opp. Golf Academy, Rajpath Club X- Road,
S.G. Highway, Ahmedabad – 380 054, Gujarat, India
Tel: +91 79 40506111 (99 lines)
Fax: +91 79 40506111 (99 lines)
E-mail: sales@vkvc.com info@vkvc.com
www.vkvc.com
Contact (PPSA & Sales): Vineet Sood
Mobile: +91 98250 48944
Contact: Aarti CK (Marketing)
Mobile: +91 98792 08943

VKV Oilfield & Pipeline Services Co Pvt Ltd
"VKV House", 'D' Shivalik Business Center,
Opp. Golf Academy, Rajpath Club X- Road,
S.G. Highway, Ahmedabad – 380 054, Gujarat, India
Tel: +91 79 40506119
Contact (PPSA): Vineet Sood & Viraen Sood
Mobile: +91 98252 30624 & +91 98795 90464

Vee Kay Vikram & Co was established in 1969, is accredited to ISO9001:2000. VKVC manufactures pig barrels, quick opening closures, flow tees, pig wyes, tees, online leak repair clamps, pin hole repair clamps, reinforcement epoxy grout sleeves, insulation joints, pipeline connectors and pig indicators.

VKVC quick opening closures and leak repair clamps are offered with API-6H Monogram under license number 6H-0012. The closures are also available with ASME 'U' STAMP and are supplied with complete cladding.

VKVC pig launching and receiving valves are offered with API-6D Monogram under license number 6D-0622.

VKVC also manufactures various types of pipeline pigs up to 56". NB: size, including Bi Di, spherical, commissioning and special purpose pigs.

VKVC offers pig tracking services and is authorized sales & service distributor for CDI – USA Pig Tracking Equipment.

VKVC personnel are available at various sites in India, Bangladesh and Middle East for carrying out pipe jobs on contract including geometric (EGP) survey of Pipelines.

Weatherford Pipeline & Specialty Services

Weatherford P&SS (Western Hemisphere)
7721 Pinemont Drive, Houston, Texas 77040, USA
Tel: +1 713 580 9700 **Fax:** +1 713 580 9797
E-mail: pss@weatherford.com
www.weatherford.com/pss
Contact (PPSA & Sales): Britani O'Neal

Weatherford P&SS (Eastern Hemisphere)
Souterhead Road, Altens Industrial Estate, Aberdeen,
AB12 3LF, UK
Tel: + 44 1224 380200 **Fax:** + 44 1224 380202

Weatherford P&SS (Pig Manufacturing)
Friedrich-Ebert Strasse 131, Lingen, 49811, Germany
Tel: + 49 591 71020 **Fax:** + 49 591 7102 2918
Contact (PPSA & Sales): Detlev Els

Weatherford's Pipeline & Specialty Services Group is a global provider of game-changing technologies for the pipeline and process industries. With almost 40 years experience in pigging and pig manufacturing Weatherford offers an extensive range of high-quality, reliable pigs either off the shelf or specially designed to suit clients' specific requirements. Weatherford's inspection tools utilise the latest technologies and expertise and include MFL/TFI, UTWM and UTCD, as well as SAAM® Smart Utility Pig and MultiCal^{SM} 360. Additional pipeline services include cleaning, filling, testing, dewatering, drying, and purging. For every pigging requirement, Weatherford can provide a dependable solution.

Associate Members

BATTERY MANUFACTURER
Saft America, Inc 39

BRUSH MANUFACTURERS
Cottam Brush Ltd. 37
Fiberbuilt® Manufacturing Inc 38
Osborn International GmbH. 39

COMPONENT MANUFACTURER
Integrated Magnetics Inc. 38

NON-DESTRUCTIVE TESTING
Innospection Limited 38

OIL AND GAS PRODUCTION AND EXPLORATION
Shell UK Exploration & Production 39
Statoil ASA 40

PIPELINE CONTRACTORS
Ghizzoni SpA. 38

PIPELINE REINFORCEMENT SYSTEM
The Clock Spring Company, L.P. 37

PIPELINE SERVICES PROVIDERS
Brenntag Nederland BV 36
China Petroleum Pipeline No. 4 Eng Corp. 37
Jee Ltd 39
P.S.E. International Ltd 39

PIPELINE SYSTEM OPERATOR
S.N.T.G.N. Transgaz S.A. 40

POLYURETHANE MANUFACTURER
Dow Formulated Systems 37

RENTAL SERVICES
Atlas Copco Rental B.V. 36
Speedy International Asset Services Equip Rental . 40

Atlas Copco Rental B.V.

RENTAL SERVICES

Merwedeweg 7, 3336 LG Zwyndrecht,
The Netherlands
Tel: +31 (0) 10 23 10110 **Fax:** +31 (0) 10 23 111
E-mail: verhuur@nl.atlascopco.com
www.atlascopcorental.nl
Contact (PPSA & Sales): Mr M. Jasica

Atlas Copco Rental provides compressors, dryers, nitrogen and power generators for the pipeline industry. They respond to the needs of the pipeline industry, by providing temporary oil-free and oil-injected air, nitrogen and power solutions. With their on- and offshore rental fleet, it is their highest priority to be your trusted partner for air solutions, offering reliable, safe and cost-effective equipment and services. That's how they envision building long term relationships with their customers.

Their on- and offshore trained engineers provide total solutions to specific issues, 24/7. With this approach they look beyond continuity and are committed to your sustainable productivity.

Brenntag Nederland BV

PIPELINE SERVICES PROVIDER

European Oil & Gas Department
PO Box 79, 3300 AB Dordrecht,
Donker Duyvisweg 44, 3316 BM Dordrecht,
The Netherlands
Tel: +31 78 654 4944 **Fax:** +31 78 654 4128
E-mail: info@brenntagoilandgas.com
www.brenntagoilandgas.com **www.**N-SPEC.com
Contact (PPSA): Peter Verkiel
Peter.Verkiel@Brenntag.nl

Brenntag, a world-leading distributor of industrial and specialty chemicals, provides a full line of products and services to the oil and gas producing and processing industry. Its product range includes process, production and cleaning chemicals. Brenntag pipeline services include high quality pigging activities, chemical and geometry surveys.

Whatever the contamination in the pipeline, Brenntag provides a solution. Its unique chemicals and services allow pipeline operators to clean lines online, combining task specific surfactants with advanced surface cleaning effects and non-hazardous carrier fluids. Brenntag's team of highly trained specialists provides these services on a project or turn key basis.

China Petroleum Pipeline No. 4 Engineering Corp. Precommissioning Administration Center

PIPELINE SERVICES PROVIDER

No. 158, Aimin East Road, Langfang, Hebei Province, 065000, Peoples Republic of China
Tel: +86 3162172203 / +86 15909206058
Fax: +86 3162172203 / +86 3162175379
E-mail: zhangbo.cpp@gmail.com
www.cpnpc.com
Contact (PPSA & Sales): Zhang Bo

China Petroleum Pipeline No. 4 Engineering Corp. Precommissioning Administration Center is mainly working in the construction fields of oil and gas transportation pipeline strength test, pipeline proof test, pipeline pigging and pipeline cleaning and gauging. They also provide large-scale storage tank pressure test, process pipeline network purge, air drying for long-distance pipeline, pump station and valve chamber, vacuum drying, pipeline nitrogen filling and large displacement and high pressure compression air supply.

The Clock Spring Company, L.P.

PIPELINE REINFORCEMENT SYSTEM

621 Lockhaven Drive, Houston, Texas 77077, USA
Tel: +1 281 590 8491 **Fax:** +1 281 590 9528
E-mail: sales@clockspring.com
www.clockspring.com
Contact: Shawn Laughlin

4A The Causeway, Godmanchester, Huntingdon, Cambridge PE29 2HA, UK
Tel: +44 1480 414 703 **Fax:** +44 1480 414 705
E-mail: sales@clockspringUK.com
Contact: Andrew Patrick

Highly effective, ingeniously simple, the Clock Spring pipeline reinforcement system redefines the economics of pipeline repair. With the patented Clock Spring system, permanent field repair and reinforcement of pipe sections weakened by corrosion or mechanical damage is easy, fast and inexpensive.

The Clock Spring sleeve is a specially developed, 0.06" sheet of high strength composite material. Its unique coil-shaped configuration creates a matrix memory which allows the Clock Spring® to wrap tightly around pipe of virtually any size. Applied with a patented fast-curing yet incredibly strong adhesive, it forms a composite wrap which actually exceeds the yield strength of the original pipe.

Cottam Brush Ltd

BRUSH MANUFACTURER

Unit 7, Monkton Business Park North, Hebburn NE31 2JZ, UK
Tel: +44 191 428 2510
Fax: +44 191 428 3078
E-mail: info@cottambrush.com
www.cottambrush.com/
Contact (PPSA): Ben Cottam
Contact (Sales): Nigel Hutchinson, Laura Hamilton, Kathy Bevan

Their Vision: "To provide world class brush solutions through partnership and innovation"

Cottam Brush Ltd are one of the longest trading companies in the global brush manufacturing sector. They specialise in the design and manufacture of brushes used to clean and inspect pipelines.

Their QUATTRO-FLEX brush has been developed specifically for the North American market and is made to fit existing cleaning pigs. The brush has been designed to clean better and last longer than existing legacy products and features the latest in pencil brush technology.

Dow Formulated Systems

POLYURETHANE MANUFACTURER

Station Road, Birch Vale, High Peak, Derbyshire, SK22 1BR
Tel: +44 1663 746518 **Fax:** +44 1663 746605
E-mail: help@dowhyperlast.com
www.dowhyperlast.com
Contact (PPSA & Sales): Paul Fitzgerald

Dow Formulated Systems manufacture polyurethane systems for a variety of Pig wear components amongst many other engineering applications. Their aim is to be the material technology provider of choice, offering application development and processing support to grow your business with their range of innovative solutions for the most demanding industrial engineering applications. Dow Formulated Systems offer more than 40 years of experience, reliable service, and creative polymer design, as well as the vast resources of one of the world's largest and most respected chemical companies.

Fiberbuilt® Manufacturing Inc

BRUSH MANUFACTURER

3613 63rd Avenue NE, Calgary, Alberta, T3J 5K1, Canada
Tel: +1 800 661 8132 or +1 403 274 6366
Fax: +1 800 661 3137 or +1 403 275 4718
E-mail: brush@fiberbuilt.com **www.**fiberbuilt.com
Contact (PPSA & Sales): Robert Leeds
rleeds@fiberbuilt.com

Fiberbuilt® is one of the leading brush manufacturers in the pipeline industry. Fiberbuilt®'s patented MFL brushes and pipeline cleaning brushes have been laboratory tested for best magnetic flux conductivity, pull-out strength and wear resistance.

Specializing in pencil brushes, Fiberbuilt® manufactures with a variety of wire types, diameters and sleeve dimensions. For the past 50 years, Fiberbuilt® has used its innovative engineering and experience to customize industrial brushes to meet industry requirements.

Ghizzoni SpA

PIPELINE CONTRACTORS

Via Meucci no 4, 43010 Vidalenzo di Polesine, Parma, Italy
Tel: +39 0524 989 **Fax:** +39 0524 98042
E-mail: g.dondi@ghizzonispa.com
www.ghizzonispa.com
Contact (PPSA): Giorgio Dondi

Ghizzoni SpA has been operating in the pipeline construction field since the 1950s and has gained valuable practical experience in the different sectors.

Ghizzoni SpA has highly specialised equipment including on-line automatic welding, induction pre-heating systems, lifting and transporting systems by means of cables, winches and capstans, waterway crossing, H.D.D. rig, hydrostatic ns pneumatic testing, drying, cleaning and commissioning up to 60".

The Quality Management System of Ghizzoni SpA is certified to UNI EN ISO 9001:2000, OHSAS 18001:1999 and ISO 14001:2004.

Innospection Limited

NON-DESTRUCTIVE TESTING

Unit 1, Howemoss Avenue, Kirkhill Industrial Estate, Dyce, Aberdeen, AB21 0GP, UK
Tel: +44 1224 724 744 **Fax:** +44 1224 774 087
E-mail: a.boenisch@innospection.com
info@innospection.com
www.innospection.com
Contact (PPSA & Sales): Andreas Boenisch

Innospection is a specialist in electromagnetic inspection technologies such as Eddy Current and SLOFEC™ and has delivered advanced NDT solutions to the worldwide process industries including the oil and gas (on- and offshore) industry for over ten years.

Innospection supplies advanced inspection solutions and services for the inspection of pipelines, caissons, risers, flexible risers, subsea structures, ship hulls, pressure vessels, storage tanks and heat exchangers.

MEC-FIT™ is a flexible riser inspection tool developed to offer rapid external scanning through the various armour layers for corrosion detection.

MEC-Combi Crawler supports the inspection and lifetime assessment of subsea structures ranging in size and complexity from small diameter risers through caissons and pipes, to platform legs and flat surfaces like ship hulls.

Integrated Magnetics Inc.

COMPONENT MANUFACTURER

11250 Playa Court, Culver City, CA 90230, USA
Tel: +1 310 391 7213 **Fax:** +1 310 390 4357
E-mail: AnilN@InteMag.com
www. InteMag.com
Contact (PPSA & Sales): Anil Nanji

Integrated Magnetics (IM) produces components for magnetic flux leakage inspection equipment. IM produces components for pipelines from a few inches to over 48 inches (1.2m) in diameter, utilizing, where necessary, highly temperature stable magnet materials. With its own ISO 9000 registered production plants in California, Mexico and China, IM offers optimized cost and lead-time solutions to its clients. IM also designs and produces custom engineered motors, alternators, resolvers, couplings, and other components. It has served the oil services, semiconductor, medical and aerospace markets with magnetic solutions for critical applications since 1955.

Jee Ltd

PIPELINE SERVICES PROVIDER

Hildenbrook House, The Slade, Tonbridge, Kent, TN9 1HR, UK
Tel: +44 1732 371371
E-mail: liam.harvey@jee.co.uk **www.**jee.co.uk
Contact (PPSA & Sales): Liam Harvey

Jee Ltd is an independent firm of engineers that delivers high-calibre pipeline, cable, riser and subsea engineering and training services to the oil, gas and renewables industries.

As an international business, they are capable of handling both long-term projects and ad hoc subsea engineering and pipeline support worldwide. Their experience includes all stages of a project lifecycle from concept selection through design, integrity management during operation to cables, structures, lifetime extension and decommissioning.

Jee Ltd was established in 1988 and now has 68 staff operating from their offices in London and Aberdeen.

Osborn International GmbH

BRUSH MANUFACTURER

Ringstrasse 10, D-35099 Burgwald, Germany
Tel: +49 6451 588-0 **Fax:** +49 6451 588-206
E-mail: thildebrandt@osborn.de
www.osborn.de
Contact (PPSA & Sales): Torsten Hildebrandt

Brushes for pipeline pigging, weld cleaning and pipe cutback.

P.S.E. International Ltd

PIPELINE SERVICES PROVIDER

Søbækvej 2, 8740 Brædstrup, Denmark
Tel: +45 702 36008 **Fax:** +45 702 36009
E-mail: info@pse-int.com **www.**pse-int.com
Contact (PPSA & Sales): Peter Vemmelund

P.S.E. International Ltd provides services and constructs drying equipment for the drying and cleaning of pipes in the oil and gas industries.

The company was founded by Peter Vemmelund and Kent Friborg who have over 30 years experience in: drying (drying with super dry air), vacuum techniques, cleaning and refrigeration techniques. Today PSE International is owned by Peter Vemmelund, Lars Hartvigsen and Torben Bilstrup.

P.S.E. International uses top quality measuring instruments to ensure quality of work. The drying system is specially constructed, the dry air being 100% oil free because air blowers in the compression part, operate without oil. The method of drying is well approved and used on pipelines with diameter from DN 80 (3") to DN 1400 (56") worldwide.

Saft America, Inc

BATTERY MANUFACTURER

107 Beaver Ct., Cockeysville, MD 21030, USA
Tel: +1 410 771 3200 **Fax:** +1 410 771 1144
E-mail: nicole.haslip@saftbatteries.com
www.saftbatteries.com
Contact (PPSA & Sales): Nicole Haslip

Saft is a world specialist in the design and manufacture of high-tech batteries for industry. Saft supplies the pigging industry with primary lithium, Ni-MH and Ni-Cd battery technologies that provide reliable power for pipeline inspection tools. It designs and manufactures its custom cells and batteries in the U.S. and Europe, using the most advanced electrochemistry and manufacturing processes.

Saft batteries are used in high performance applications, such as oil and gas, transportation, telecom, standby, grid stabilization, space and defense. It is one of the world's leading manufacturers of nickel batteries for industrial applications and of primary lithium batteries for a wide range of end markets. Saft is also delivering its lithium-ion technology to new applications in clean vehicles and renewable energy storage. With approximately 4,100 employees worldwide, Saft is present in 19 countries. Its 16 manufacturing sites and extensive sales network enable the group to serve its customers worldwide.

Shell UK Exploration & Production

OIL AND GAS PRODUCTION AND EXPLORATION

1 Altens Farm Road, Nigg, Aberdeen, AB12 3FY, UK
Tel: +44 1224 882000 **www.**shell.com
Contact (PPSA): William Hughson

Speedy International Asset Services Equipment Rental LLC

RENTAL SERVICES

18th Floor, Bin Moosa Tower, Shk Hamdan Street, PO Box 716, Abu Dhabi, UAE
Tel: +971 50 4438 031 **Fax:** +971 26 26338
E-mail: john.cable@speedy.ae **www.**speedyhire.com
Contact (PPSA & Sales): John Cable

A group company of UK listed Speedy PLC, Speedy International provides equipment and services for rental into the oil and gas sector across the globe.

From its bases in the Middle East and the UK, Speedy International supplies across Europe, the Middle East, North Africa, Asia Pacific and East Asia regions. The company has available for rental, primary oil flooded and oil free compressors, driers, booster compressors, nitrogen production units, generators and manpower to support its equipment in the field.

Statoil ASA

OIL AND GAS PRODUCTION AND EXPLORATION

N-4035 Stavanger, Norway
Tel: +47 51 99 00 00 **Fax:** +47 51 99 00 50
E-mail: ator@statoil.com www.statoil.com
Contact (PPSA): Alf Tordal

S.N.T.G.N. Transgaz S.A.

PIPELINE SYSTEM OPERATOR

International Cooperation Department
P-ța C. I. Motaş nr. 1, 551130 Mediaş, jud. Sibiu, România
Tel: +40 269 803 024 **Fax:** +40 269 844 699
E-mail: gabriela.mares@transgaz.ro
www.transgaz.ro
Contact (PPSA & Sales): Gabriela Mareş

S.N.T.G.N. Transgaz S.A. is the operator of the Romanian National Gas Transmission System, consisting of approximately 13000km of pipelines between 6" and 40".

The company is responsible for the safe and efficient operation of the system and for its development, thereby observing all European requirements regarding transparency, fair access to the transmission system to third parties and security of supply.

Individual Members

Che Mokhtar Bin Shaari

Mears Group Inc, USA, SEA Office, No. 8A, 1st Floor, Jalan Opera L U2/2, Seksyen U2, Taman TTDI Jaya, Shah Alam, 40150 Selangor, Malaysia
Cell Phone: +6019 268 8888
E-mail: Che.Shari@Mears.net
E-mail: chemok@tm.net.my
International Business Development Manager for Mears Group Inc. USA

David E Bull

ViaData LP, 410 Longview Drive, Sugar Land, Texas 77478, USA
Tel: +1 281 242 6394 **Fax:** +1 281-242-6498
E-mail: debull@viadata.com **www.**viadata.com
Co-founder of ViaData LP, publisher of WinDOT, The Pipeline Safety Encyclopedia, the #1 reference application for the federal and state Pipeline Safety regulations. Technical adviser to PPSA.

Claudio Dias

Decapametal Decapagem e Flushing Ltda
38, José Félix St, Riachuelo, Zip code: 20961-010, Rio de Janeiro, RJ, Brazil
Tel: +55 21 2581 3111 **Fax:** +55 21 2581 7145
E-mail: claudiodias@decapametal.com.br
www.decapametal.com.br
Contact (PPSA & Sales): Claudio Dias
Chemical cleaning, flushing, hydrostatic test and pig release performed in different fields.

Ken Gibson

Adrian Engineering Consultancy Ltd, 15 Alderley Drive, Ashdown Manor, Newcastle Upon Tyne NE12 6FS, UK
Tel: +44 191 268 3726 **Fax:** +44 191 268 3726
E-mail: Adrian.Eng@btinternet.com
Pipeline inspection consultant. Magnetic flux leakage, ultrasonic inspection operators, including gauging, cleaning and caliper operations.

Virginio Grassi

Petromed Ltd, Via Angelo Moro, 119, 20097 San Donato Milanese, Italy
Tel: +39 02 516 4031 **Fax:** +39 02 516 40343
E-mail: petromed@petromed.it
www.petromed.it
Pipeline inspection consultant and representative.

Steve Hutcheson
Pipeline Pigging Technology Ltd, Dunston Innovation Centre, Dunston Road, Chesterfield, Derbyshire S41 8NG, UK
Tel: +44 1246 267750 **Fax:** +44 1246 269381
E-mail: steve@pipeline-pigging.com
www.pipeline-pigging.com
Consultant: pigging feasibility studies, specialist design, multi-diameter, tender preparation and evaluation, cleaning applications, project management and testing supervision.

Philip Johnson
Meerkat Applications Limited, PO Box 2984 Longton, Stoke-on-Trent, Staffordshire, ST3 9DB, UK
Tel: +44 7815 683 755
E-mail: sales@meerkatapplications.co.uk
www.meerkatapplications.co.uk
Manufacturer of pigging and supporting control systems to improve the efficiency of food and beverage production using the latest technologies.

Oliver Klinger
Oildom Publishing Company of Texas, Inc., PO Box 941669, Houston, Texas 77094-8669, USA
Tel: +1 281 558 6930 **Fax:** +1 281 558 7029
E-mail: oklinger@oildom.com
Publishing: Pipeline & Gas Journal, Underground Construction, Pipeline News. Host: UCT Conference, Pipeline Opportunities Conference.

BJ Lowe
Clarion Technical Conferences, 3401 Louisiana St, Suite 255, Houston, TX 77002, USA
Tel: +1 713 521 5929 **Fax:** +1 713 521 9255
E-mail: bjlowe@clarion.org **www.**clarion.org
Training courses, conferences and publications for the pipeline industry. Organizer of conferences and workshops for the pipeline industry.

Steven Ma
Central Polymer & Engineering Supply, No 10, Tractor Road, Jurong Town, Unit No. W2-e5b, Singapore 627971
Tel: +65 62622305 **Fax:** +65 62622135
E-mail: rubber@pacific.net.sg
www.cpes.com.sg
Manufacturer/trader of rubber, plastic and polyurethane products, including polyurethane pigs.

Aidan O'Donoghue
Pipeline Research Ltd, PO Box 5521, Glasgow G46 6YX, UK
Tel: +44 141 6378093 **Fax:** +44 870 0513697
E-mail: aidan@pipeline-research.com
www.pipeline-research.com
Pipeline and pigging consultant. Routine and specialist applications; feasibility studies and appraisals; modelling and software. Technical adviser to PPSA.

John Pitchford
Pitchford In-Line Ltd, 14 Earnshaw Way, Whitley Bay, Tyne & Wear, NE25 9UN, UK
Tel: +44 191 289 2300 **Fax:** +44 191 289 2300
E-mail: info@pitchford-in-line.co.uk
www.pitchford-in-line.co.uk
Consultancy Services: Intelligent pigging, feasibility studies, assessments, special pig designs, test loop design, blockage/stuck pig location. Technical adviser to PPSA.

Patrick C Porter
P C Porter Consulting Inc, 17330 Meadow Heights, Houston, Texas 77095, USA
Tel: +1 281 856 8552
E-mail: pcporter@hotmail.com
Consultant on pipeline integrity and ILI issues. Former President of PPSA. Technical Adviser to PPSA.

Dr J Smart
John Smart Consulting Engineers, 542 Stoneleigh Dr., Houston, Texas 77079, USA
Tel: +1 281 493 5946 / +1 281 493 0383
Fax: +1 281 493 5024
Mobile: +1 832 656 5946
E-mail: jacksmartiii@hotmail.com
Corrosion Consultant: internal corrosion in pipelines, chemical treating, pigging programs. Technical adviser to PPSA.

Tom Sowerby
Tom Sowerby Ltd, 5 Younghall Close, Greenside, Ryton, Tyne and Wear, NE40 4QG, UK
Tel: +44 191 413 2013
Mobile: +44 7811 110568
E-mail: tom.sowerby@btinternet.com
Consultant on intelligent pigging of pipelines and assessment of the suitability of pipelines for all types of pigging. Technical adviser to PPSA.

Torbjorn Staalesen
Mail: Staalesen Solutions AS, PO Box 606,
N-5501 Haugesund, Norway
Office: Staalesen Solutions AS, Ovregaten 83,
N-5528 Haugesund, Norway
Mobile: +47 9007 7899 Tel: +47 5273 1040
E-mail: post@staalesen-solutions.com
www.staalesen-solutions.com
In-line inspection project and field operation support and experience transfer.

Björn Stoltze
HAPP Technology Ltd, Hauptstr. 58,
79379 Muellheim, Germany
E-mail: Bjoern.Stoltze@happ-tech.com
www.happ-tech.com
Pipeline cleaning with the Hydraulically Activated Power Pig (HAPP) technology.

Jusuf Sutomo
PT ITS Kemitraan, Graha Sepuluh Nopember,
2nd Floor, Wilis Room, JL Raya ITS, Kampus ITS,
Sukolilo, Surabaya 60111, Indonesia
Tel: +62 31 5916259 +62 81 1324958
Fax: +62 31 5924339
E-mail: jsutomo@oe.its.ac.id jsutomo@mail.com
Operation Manager of PT ITS KEMITRAAN providing engineering and technical consultancy services to oil and gas sectors.

John Tiratsoo
Great Southern Press, PO Box 21, Beaconsfield, Bucks.
HP9 1NS, UK
Tel: +44 1494 675139 **Fax:** +44 1494 670155
E-mail: jtiratsoo@gs-press.com
www.pipelinesinternational.com
Editor-in-chief of Pipelines International and conference and training course organizer.

Doug & Chris Woodley
Woodley Pipeline Services Ltd, Fairfield Hall,
Rycroft Way, Wooler, Northumberland, NE71 6BW, UK
Tel: +44 7785 517 523
E-mail: enquiries@woodleypipelineservices.co.uk
www.woodleypipelineservices.co.uk
Consultants: Pig design/testing/feasibility studies. Tender preparation/evaluation. Inspection data and report assessment, vendor comparison/QA. MFL data training. Technical advisers to PPSA.

Honorary Members

Gill Hornby
Retired Executive Secretary of PPSA

Chris Kershaw
Founder member of PPSA. First President (1991–1992). Treasurer (1991–2000).

Coleman McDonough
424 Granada Calle Ct., Granbury, TX 76049, USA
Tel: +1 817 480 2147
E-mail: cmcdono720@aol.com
Pipeline pigging consultant. Former President of PPSA.

Visit PPSA's Web Site
www.ppsa-online.com
for more information and Hyperlinks to Members' Web Sites

Some useful conversion factors

LENGTH

1 in	= 25.40 mm
	= 2.540 cm
	= 0.0254 m
1ft	= 304.80 mm
	= 30.480 cm
	= 0.3048 m
1 mile	= 1.6094 km
1 mm	= 0.0394 in
1 cm	= 0.3937 in
1 m	= 39.370 in
	= 3.2808 ft
	= 0.6214 miles

VOLUME

1 barrel	= 42 US gallons (liquid)
	= 34.9909 Imperial gallons
	= 5.6146 cu ft
	= 158.9871 li
	= 0.1590 cu m
1 US gallon (liquid)	= 0.0238 barrel
	= 0.1337 cu ft
	= 0.00379 cu m
	= 3.7854 li
1 US gallon (liquid)	= 0.0038 cu m
	= 0.8327 Imperial gallons
1 Imperial gallon	= 0.0286 barrel
	= 0.1605 cu ft
	= 277.4171 cu in
	= 4.5460 li
	= 0.0045 cu m
	= 1.2009 US gallons (liquid)
1 li	= 0.001 cu m
	= 1000.0000 cu cm
	= 0.2200 Imperial gallons
	= 0.2642 US gallons (liquid)

VELOCITY

1 mile/hour (mph)	= 0.0167 miles/min
	= 0.0003 miles/sec
	= 88.000 ft/min
	= 1.4667 ft/sec (fps)
	= 1.6094 kilometres/hour (kph)
	= 26.8225 m/min
	= 0.4470 m/sec
1 kilometre/hour (kph)	= 0.01667 kilometres/minute
	= 0.0003 kilometres/sec
	= 16.6667 m/min
	= 0.2778 m/sec
	= 0.6214 mph
	= 54.6800 ft/min
	= 0.9113 ft/sec
1 ft/sec	= 0.6818 mph
	= 1.0973 kph
	= 0.3048 m/sec
1 m/sec	= 3.6000 kph
	= 2.2369 mph
	= 3.2808 ft/sec

MASS

1 pound (lb)	= 0.4536 kg
1 kg	= 2.2046 lb

WEIGHT OF WATER @ 62°F/16.67°C

1 barrel	= 349.9860 lbs
	= 158.7512 kg
1 US gallon	= 8.337 lbs
	= 3.7820 kg
1 Imperial gallon	= 10.0122 lbs
	= 4.5420 kg

APPROX WEIGHT OF CARBON STEEL

1 cu in	= 0.283 lbs
	= 0.128 kg
1 cu ft	= 489.0 lbs
	= 221.8 kg
1 cu cm	= 0.008 kg
	= 0.017 lbs
1 cu m	= 7810 kg
	= 17300 lbs

PRESSURE

1 ft head water @ 60°F	= 0.4335 pounds/square inch (psi)
	= 0.0305 kilogrammes/square centimetre
	= 0.0299 bars
	= 0.3048 m of water
1 m of water	= 0.1000 kg/sq cm
	= 0.0967 bars
	= 3.2808 ft of water
1 psi	= 0.0689 bars
1 bar	= 14.5039 psi

MISCELLANEOUS CONVERSIONS

1 Newton	= 0.225 lbs
1 lb	= 4.448 Newtons

USEFUL FORMULAE

Flow in a pipeline: m/sec = (brl/day) / $275d^2$

ft/sec = (brl/d) / $83.82d^2$

where d = inside diameter of pipe in inches

This material is reproduced from the PPSA publication "An introduction to Pipeline Pigging"

PIGGING PRODUCTS & SERVICES ASSOCIATION

Visit the PPSA Web Site to find out more about Pigging

www.ppsa-online.com

- MEMBERS' DIRECTORY WITH HYPERLINKS TO THEIR WEB SITES
- BUYERS' GUIDE
- FREE TECHNICAL ENQUIRY SERVICE
- PAPERS FROM PPSA SEMINARS
- NEWS OF FUTURE SEMINARS AND CONFERENCES
- PIGGING INDUSTRY NEWS
- INFORMATION ON PIGGING & TERMINOLOGY

Attend PPSA's

Annual One Day Seminar

and learn about the latest developments in Pipeline Pigging

ABERDEEN, UK • 14th November 2012

Contact: Diane Cordell, Seminar Organiser, Pigging Products & Services Association
E-mail: ppsa@ppsa-online.com
PO Box 30, Kesgrave, Ipswich, Suffolk, IP5 2WY, UK Tel: +44 1473 635863

PPSA's Book

An Introduction to Pipeline Pigging

- Why pig a pipeline?
- How to pig a pipeline
- What is a pig?
- Cost-effectiveness
- Corrosion inspection
- Pig traps and launchers
- Industrial pigging
- In-line inspection
- Pipeline design for pigging
- Equipment description and uses
- Pigging for maintenance and repair
- Pig signallers, locators and trackers
- Specialist techniques
- Pigging management

Publisher:
Scientific Surveys Ltd
PO Box 21, Beaconsfield,
Bucks HP9 1NS, UK
Tel: +44 1494 675139
E-mail: jt@scientificsurveys.com

Price: £21 UK /
$52 US elsewhere (inc. P&P)

Pipeline Industry Training

High-level training courses on a range of subjects including, pipeline pigging, inline inspection, defect assessment, risk management, onshore and subsea engineering.

Pipeline Pigging and Integrity Management Conference & Exhibition
(PPIM Houston), Houston, 11–14 February, 2013

See www.clarion.org and www.pipelinesinternational.com
or contact: Clarion Technical Conferences,#255, 3401 Louisiana, Houston, TX 77002, USA
Tel: +1 713 521 5929 E-mail: bjlowe@clarion.org